International periodic scientific journal
ONLINE
www.sworldjournal.com

SWORLD Journal

ISSN 2227-6920

Agriculture

Volume J11509
May 2015

Published by:
Scientific world, Ltd.

With the support of:

Moscow State University of Railway Engineering (MIIT)
Odessa National Maritime University
Ukrainian National Academy of Railway Transport
State Research and Development Institute of the Merchant Marine of Ukraine (UkrNIIMF)
Institute for Entrepreneurship and morehozyaystva
Lugansk State Medical University
Kharkiv Medical Academy of Postgraduate Education
Alecu Russo State University of Bălţi
Institute of Water Problems and Land Reclamation of the National Academy of Agrarian Sciences

ISSN 2227-6920 (Online)

This volume contains research papers of scientists in the field of Agriculture.

Please use the following format to cite material from this book (*italics indicate the fields to change to your data*):

Author(s), 'Title of Paper," in SWorld Journal, Vol.J11509 (Scientific world, Ivanovo, 2015) – URL: http://www.sworldjournal.com/e-journal/j11509.pdf (date:...) - *page* - *Article CID Number*.

Published by:
Scientific world, Ltd.
e-mail: orgcom@sworld.education
site: www.sworldjournal.com

Paper Numbering: Papers are published as they are submitted and meet publication criteria. A unique, consistent, permanent citation identifier (CID) number is assigned to each article at the time of the first publication.

J11509-001

Goncharov FI

MECHANIZATION OF AGRICULTURAL PRODUCTION, WHICH IS SAFE FOR HUMANS AND THE ENVIRONMENT

The paper is devoted to addressing topical issue of ensuring safe for humans and the environment the mechanization of agricultural production in years with adverse weather conditions.

The paper shows characteristics of the problem. Based on the facts of environmental changes, especially in years with adverse weather conditions, use of means of mechanization of agricultural production (in industries: agriculture, animal husbandry and processing of products) leads to a continuous increase in risk for humans and nature. The danger is determined by a decrease in production, deterioration in quality of production, pollution of agricultural land (from raw materials and waste), degradation and bacteriosis of land, deterioration of agrolandscape.

The following problems were formulated and solved to achieve the goal:

─ to study the ways of improving mechanization means of agricultural production, which are safe for humans and the environment;

─ to develop the experimental basis, research and theoretical approaches and research methodology of mechanization means of agricultural production, which are safe for humans and the environment;

─ based on experimental studies to establish regularities of structural and functional improvement of new mechanization means of agricultural production, which are safe for humans and the environment taking into account a systematic approach to ecological and economic basics;

─ to improve mechanization means, which are safe for humans and the environment, in sectors of agriculture on the basis of the systematic approach to the preparation and implementation of uniform principle of protection during formation and avalanche passing through them of technogenic (natural) water flow, which hydraulically links them together. It is necessary to take into account the limitation of emissions of pollutants and their movement, prompt disinfection and removal into the natural cycle;

─ to conduct experimental-industrial test of mechanization means, which are safe for humans and the environment in sectors of agriculture, to perform a feasibility study while providing the scientific level.

Using methods of graphic modeling of the impact of natural and man-made factors on the production process, there were identified dominant conditions of impact on the properties of the state of production. Their elimination will allow solving problems and achieving goals. The ways of solving problems are defined by the dominant exposure conditions for each type of production.

The first way involves the development of mechanization means to remove any surface runoff on the land of farm of these productions.

The second way involves means of mechanization to eliminate the movement of pathogens and other pathogenic organisms ─ waste production in areas of their

greatest accumulation of previous years.

The third way involves means of mechanization to eliminate contaminants in drinking water before its consumption in the production of these industries. Simultaneous and continuous implementation of these three developments of means of mechanization in the current year and the coming years would contribute to the protection of human health and the environment from unpredictable negative consequences of production under other equal conditions of management in years with adverse weather conditions.

The paper shows optimization of productions depending on the anomalies in adverse years for farming.

The paper considers the modeling of processes in the system: "soil surface ─ precipitation".

The effectiveness of research and development is determined according to the results of implementations in terms of production.

Conclusions.

The ways of improving means of mechanization of agricultural production, which are safe for humans and the environment, are proved, namely:

1. The paper proposes new protection method of land and water resources from pollution of anthropogenic and natural origin, which is safe for humans and environment, on the basis of the systematic approach to the development and implementation of combination of techniques to limit the creation and movement, prompt disinfection and removal of pollutants into the natural cycle in the functional units of agriculture, animal husbandry and processing of production, which lead to breakage of the hydraulic connection formed by abnormally intense precipitation or snow melting of water flow and allow to stop the processes of avalanche pollution and soil erosion.

2. When using both methods of protection of natural resources in functional units of agriculture, animal husbandry and processing of products, it was found that, the effective result is achieved through a further structuring their technological parameters when using such methods:

– elimination of surface runoff on land plot, which is involved in the production;

– decontamination of the settled sludge in sources of water supply of productions;

– water disinfection in water supply and drainage systems;

– water disinfection at the facility of water consumption.

3. Theoretical bases of the protection methods of natural resources in functional units of agriculture, animal husbandry and processing of products are determined based on the functional connection between the parameters of heterogeneous in their nature components of the fundamental structural relationship ("activity type ─ places of use ─ sequences of use ─ time of creation ─ functional action") by modeling the contamination processes and protection against contamination over a period of time (1─ limiting the formation, 2─ movement, 3─ operative decontamination, 4─ removal into the natural cycle) at the facilities of each unit.

4. When creating a model of unit in the structure of the general model of functional units of agriculture, animal husbandry and processing of products in the

form of interconnected flows of random technogenic and natural factors in the complex, time-discrete dynamical system, it is necessary to apply the results of theoretical and experimental researches of regime, technological and technical aspects of pollution and protection units and regularities of formation of the basic parameters of security technologies, modes of movement of pollutants from point of generation to the point of pollution in their relationship.

5. The protection method is designed for a particular unit, which provides unlike the existing methods, the achievement of economic project solution and its environmental acceptability based on determination of conditions of limiting their use, considered by the set of physical parameters (criteria) by their limit values. It is based on collaborative nature of realization of a set of hierarchically connected locations of protective measures, time of their organization, upgrades, and individual protective and functional properties.

6. The validation of the ways to protect natural resources in functional units of agriculture, animal husbandry and processing of products, which is offered to protect humans and the environment, is based on the movement of the contaminants from the place of formation to the place of contamination. It is determined by conditions of the stochastic nature in accordance with the type of active factor and levels of decision-making and it is achieved by establishing diverse criteria of adverse consequences of anthropogenic activities and natural factors taking into account the climate strategy of use of protective methods.

7. The final form of the way to protect people and the environment in the functional units of agriculture, animal husbandry and processing of products, quantitative and qualitative structure of their criteria, limiting conditions of technical, economic and ecological indicators depends on the tasks and decision-making levels over time, taken in the category of alternative options of design solutions and the structure of prognostic calculations of consequences of their implementation.

8. New means of mechanization of agriculture, animal husbandry and processing of products tested under production conditions have ensured conditions of production, which are safe for humans and the environment, in the adverse and abnormal years due to the positive results of the work of the means to remove land degradation, water disinfection in sources and industrial effluents and water purification at the facilities of water consumption with perturbation of contaminants by abnormal natural and anthropogenic factors, an increase in production volumes, improvement of its quality and reduction of its cost.

J11509-002

Piskunova O.G., Kleymenova N.V., Smagina T.V.

THE WAYS OF DAIRY CATTLE EFFICIENT PRODUCTIVITY POTENTIAL INCREASE IN THE OREL REGION

FGBOU VPO Orel SAU
Russian Federation, Orel, General Rodin, 69, 302019

Abstract. *The important condition of increase in production of livestock products is the completing of the dairy and the commodity farms and specialized complexes with highly productive animals. The successful solution of this task demands development and practical application in the practice the most rational, scientific and reasonable systems of cultivation young animals of agricultural animals taking info account animal husbandry specialization.*

Keywords: *calves, vitamin d, digestibility, cultivation, stimulation, tripe*

INTRODUCTION

Possibility of genetic potential maximum realizationof dairy cattle efficiency depends on knowledge of results of influence of various physiological factors of feeding on processes of the forageconsumption, digestion, metabolism and efficiency of animals. Statistics on influence of provision of growing herd replacement of dairy cattle by biologically active agents and including vitamins on indicators of consumption of the forage, processes of digestion, metabolism and intensity of growth at animals are, in this regard, especially important [3,4,5]

However the influence of D-vitamin security of diets of calfs in the first months of life on indicators of consumption of forage, digestion, metabolism, growth and development of animals, especially with a high potential of efficiency still remains unstudied. Meanwhile, provision with vitamin D is especially important for a growing organism as it is known that growth in the first months of life is carried out at the expense of increase in bone weight.[3,4,6]

Due to the stated above information, we conducted researches on studying of consumption of forage features, processes of digestion, a metabolism and intensity of growth at calfs of black and white Holstein cattle at various kinds of their provision in their diets with vitamin D.

MATERIAL AND RESEARCH METHODS

Researches were conducted on cow calves of black and white Holstein cattle, of the same age, live weight, origin, distribution up to 12 heads in a group.As a basis of feeding of calfsfrom the birth to 6-month age on the farms of the Central Chernozemniy region the standard technique of young stock breeding on the farms was taken (350 kg. of milk, 200 kg. concentrated forages, 260 kg. of hay, 400 kg. of ensilageand 21 kg.of beet molasses).[2,4]The differences between groups of calfs from the first days of life consisted in level of security with their vitamin D.The necessity of studying vitamin D level for a diet of calfs was explained by that according to our and other resources studies, the stock in a body of newborn calfs of vitamin D was the lowest in comparison with providing the calfs with other vitamins. Besides, preliminary researches showed that in diets of calfs from the first days of life even when receiving 5-6 liters of milk per day, deficiency of vitamin D makes from

13 to 35%[1,3,6].

The animals of the first group the level of a D-vitamin nutrition met standard, the content of vitamin D in the second group of animals in a diet was 10% higher than norm, at breeding the animals of the third group, along with increase in vitamin D in a diet for 10% in comparison with norm, theywere regularly let out on ground runs, the animals of the fourth group, besides increase in the content of vitamin D in a diet and regular ground runs, 20% of milk was replaced with mixed cattle feed.

RESEARCH RESULTS

While studying the palatability of vegetable forages at experimental groups of calfs it was noted that level of D-vitamin provision of their diets affected the consumption of forages very positively.Already being three months old the calfs who are grown up,the level raised for 10% of vitamin D, the indicator of consumption of forages was 11.1% higher than this indicator at calfs with vitamin D level in theirdiet, meeting standard. Thecalfs of the third experimental group which along with the level of vitamin D raised for 10% in a diet regularly were let out on ground runs, consumption of vegetable forages has increased by 15.8% in comparison with this indicator of the first calfsexperimental group.[4, 5]

When studying indicators of cicatricial digestion among the calfs of experimental group being three months old it was noted that intensity of processes of cicatricial digestion if to judge by the quantity of bacteria and infusorians in cicatricial liquid, attacks on activity of hydrolytic enzymes and concentration of metabolites, increased together with the growthof a D-vitamin food level of calfs and the highest was among the calfs of the third experimental group [4, 5].

When studying indicators of digestion and the use of nutrients of diets of the 3-month-old calfs in experimental groups, it was noted that in process of vitamin D level increase in a diet of calfs in the second and the third experimental groups not only the consumption of nutrients of a diet raises, but also coefficients of digestibility and their use. So, coefficients in digestibility of solid substance of a diet among 3 months old calfs of the first, second and third experimental groups made respectively 68,29; 69,17 and 69,73%. Difference in digestibility coefficients between the second group and the first one and as the third one and first experimental groups is reliable at P <0,05[5]

Coefficients of digestibility of a protein of a diet among the calfs of the first, second and third experimental groups made respectively 75,99; 78,78 and 78,73% .The difference between the first one and the second group and the third one is reliable at P <0,05[5]

When studying intensity of calfs growth it was noted that at the age of 6 months old the first, second and third experimental groups reached live weight respectively 132,5 ∓1.5; 146

and the first one is reliable at P<0, 05 and between the third group and the first one – at P<0, 01[5]

Such indicators of forage consumption, digestibility of nutrients and intensity of growth of calfs allowed the animals of the fourth experimental group with the raised level of vitamin D and regular walks on ground runs to shorten the consumption of whole milk in the feeding scheme from 350 kg to 280 kg without any detriment to

their growth and development.

Besides, researches tracked the further growth and developments of the experimental calfs after completion of the experiment.

Throughout the researches the calfs of the third experimental group had the highest rates of live weight and an average daily gain of live weight. Calfs of the second and fourth experimental groups took on indicators of live weight and an average daily gain of live weight average situation between calfs of the first and third experimental groups. However, thus it is necessary to consider that the cost of breedingof the calfs of the fourth group was lower at the expense of replacement of 25% of milk in the scheme of feeding by compound feed-substitute.

At the age of 18 months calfs of the second, third and fourth experimental groups the live mass of their body made respectively 332,84,8 kg, 352,02, 3,360,51,7 and 358,51,3кг, and the difference in live weight among the calfs of the second, third and fourth experimental groups and calfs of the first experimental group was reliable (P<0,01)[5]

At the age of 18 months of the calfs of all experimental groups were inseminated, and they were observed till the time of the range calving. After the range calving of the animal experimental groups contained on the regular ground runs in identical conditions of feeding.

On the third month of lactation at firstcalf heifers of experimental groups the average daily yield of milk was defined. As a result of control milking of firstcalf heifers of the first, second, third and fourth experimental groups it was established that average daily calculation on one head made respectively 15,10∓0,25,16,00∓ 0,31,16,900∓ ,21 and 16,60∓ 0,19 kg.

The difference in an average daily yield of milk between firstcalf heifers of the second, third, fourth experimental groups and firstcalf heifers of the first experimental group was reliable (P <0,05).The expenditure of feed grain units on 1 kg of milk made on the first, second, third and fourth experimental groups of firstcalf heifers respectively 1,01,1,04,0,98 and 1,00 [5]

SUMMARY

From results of researches there is obvious that a dairy efficiency of firstcalf heifers of the experimental groups which have been grown up at various levels of vitamin D in diets, different conditions of the contents and the feeding, is in direct dependence on the live weight of a body during insemination. On the basis of these data it is possible to conclude that in process of growth of productive potential of dairy cattle there is a need of specification of norms of feeding and ways of the contents not only lactation cows, but also herd replacements

LIST OF REFERENCE

1. Zelenkov, P.I. Catle breeding /P.I.Zelenkov,A.I.Barannikova, A.P.Zelenkov. -R-on-D.:Feniks,2005

2. Norms and rations of farm livestock feeding ,Advisory tool,-3 d addition,revised and enlarged edition/under A.P.Kalashnikov,V.I.Finisina,V.V.Shcheglova,N.I.Kleymenova.-M,2003.-456 p.

3. Sirotinin V.I. Young stock breeding / V.I.Sirotinin .-SPb:Lan,2007.-222 p.

4. Kozlov, A.S. Effective system of cultivation repair young grounth is an important condition of milk production / A.S. Kozlov, O.G. Piskunova, A.N. Mitin, B.U. Martinov. – Orel : Vestnik Orel SAU.

5. Piskunova O.G. Processes of digestion of black and white Holsteincalfsat the various D-vitaminized provision / O.G.Piskunova.-Diss in Ph.D. thesis in Biological Science.-Orel: Orel SAU publ.,2010.-134 p.

J11509-003

Kyianovskyi A.M., Danilchenko M.B.

DEVICE FOR INCREASING PRODUCTIVITY BEE COLONY

Kherson State Agrarian University,
Kherson, R.Luxemburg 23, 73006

Abstract. This paper presents a device for irradiation of bees in the electromagnetic field in terms of the apiary, designed to increase the productivity of the bee colony. The features of the design and use of the device examined.

Keywords: bees, the electromagnetic field, irradiation.

The action of the electromagnetic field (EMF) on the colonies of bees stimulates excitation of bees.

Physiological state of the bees, the microclimate in the nests of bees depend on the intensity and frequency of EMF, exposure time. Increasing temperature and carbon dioxide concentration in the hive, the intensity of the sounds produced by bees, their physical activity.

Essential that the EMF action even tensions sufficiently high (up to 130V/cm) does not have any negative influence on the lifespan of bees [1, 2, 4].

Of particular interest is the influence EMF on the average daily laying ability of queens, as the queen bee has a significant impact on the productivity of her family [3]. According to our research, irradiation, conducted in the second half of August, causes an increase in egg-laying queens by 20%, and in some families up to 32% [4].

The intensity of the activity of bees during irradiation EMF is greatly increased, which may be successfully used to improve the productivity of the bee colony. For this purpose, we have developed a device for irradiation of bees in the apiary conditions. In designing device guided by the following provisions:

• optimal frequency electric field is 500 ± 20 Hz;

• the tensions of electric field is adjusted in the range of 0-120 V/cm;

• this device must operate continuously or as packages with varying duty cycle;

• for adapt to the electromagnetic field bees at work in pulsed mode envisaged the ability to change the amplitude of the time - the field strength should increase slowly at first, and at the end irradiation slowly reduced to zero;

• in pulse mode is possible to change the pulse duration and pause between them;

• the device is powered from both AC industrial frequency and battery voltage of 12V or a stand-alone low power;

• design of the device and the process of bees meet safety requirements;

• device is necessary for objective control of physiological state of the bees; in the conditions apiary most simply, reliably and efficiently controlled by the state of bees in the nest temperature (of course, is taken into account and the behavior of bees).

The action of the electromagnetic field was evaluated on the following criteria: the temperature in the center of the nest, flight activity of bees, the average daily egg production of the uterus, the force the bee colony, of food stocks, filling hundreds of of brood cells, pollen and honey, wax excretion.

The electrical circuit and design of device

When designing generator of an alternating voltage variants were considered devices generating a sinusoidal wave and a rectangular shape. Preliminary tests have not revealed dependence behavior of bees from signal shape, so preference is given to a simple and reliable source of non-sinusoidal signal - symmetric multivibrator.

In this case, the amplifier operates in the switching mode, which drastically reduces the requirements for it. A simplified a circuit diagram of device shown in fig.1.

Bee family is placed between the electrodes - metal plates P, on which loaded secondary winding of the high-voltage transformer T2. The required voltage amplitude is set by resistor R10 and is controlled by indicating instrument (not shown in fig).

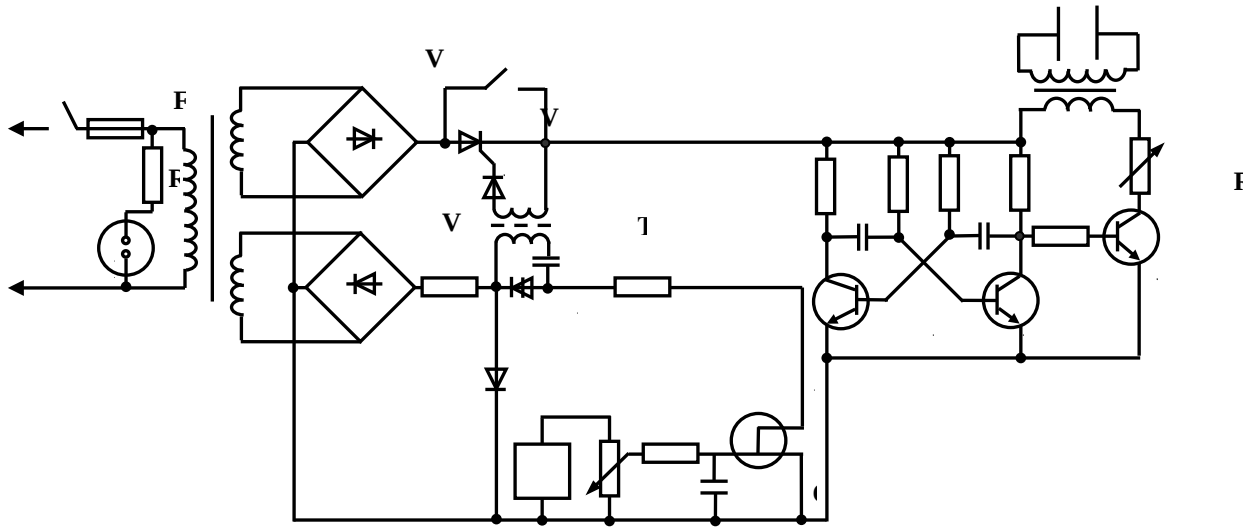

Fig 1. Schematic diagram of the device for irradiation of bees

In the primary winding of the transformer T2 is turned on transistor VT8, performance in the key mode and controllable multivibrator, assembled on transistors VT6 and VT7. Is set the frequency of 500 Hz, which can easily be changed in this or that side.

When operating in continuous mode, the switch S1 is closed, the tensions EMF constant. When a pulse, better impact on the field of bees, the switch S1 is open, the food at primary winding of the transformer T2 enters through thyristor VS1.

With the help of time relay RV sets the optimal length of exposure (35-60 s) and pause (15-20 s), and rise time and fall time, is set by changing the time constant of chains R3R4S2 is 7-10 seconds. When charging of the capacitor C2 drain-source resistance of the FET VT5 reduced and consequently to a decrease the period of variations the oscillator on dynistor VS2. As a result, thyristor VS1 increasing part of the half-period of the supply voltage is in the open state, so that the output voltage of the rectifier increases. Accordingly, the voltage increases and the plates P.

Time relays PB (not shown) consists of two adjustable by frequency generators with keys for managed run. Output of the generator connected to the counter with a conversion factor 2^{15}. Direct and inverted outputs of the counter connected to the

control input of the generator that allows you to turn generators alternately.

The outputs of the generators are connected to the inverting input of the operational amplifier, enabled by the integrator circuit with a constant of integration of tens of seconds. The output signal eventually reaches the input transistor VT8. Changes in the frequency and zero offset integrator can change in a wide range pulse duration, pause, rise and fall of the pulse, i.e., select different time-varying modes of action on insects.

Thermometer to monitor the state of the bees. The temperature sensors are located in the center of the nest, their size should be minimal. They are installed in each hive, so to use one meter parameters of all sensors must be identical.

The linear dependence of the voltage drop across a semiconductor diode on the temperature at fixed forward current allows us to produce a simple thermometer with a linear scale and acceptable accuracy. In the basis of application of the thermometer taken scheme proposed in [5]. Sensors - a miniature silicon diodes KD102A.

This thermometer can also be used for monitoring the condition of bees during the winter.

The design of the instrument. The design of the instrument is on the block-modular and is a set of functional blocks:

- master oscillator power amplifiers (transistor switch), controlled by the modulator;
- power supply;
- high-voltage transformer.

Blocks made in the form of two printed circuit boards are placed on the circuit elements. Electrical connection is made via connectors, which interconnect wires soldered connections.

High voltage transformer T2 is made on magnetic circuit Ш32×60 (TC-180) and paraffin in a separate building, which is located on the lid connector voltage generated master oscillator and amplifier, two terminals for supplying high voltage to the electrodes. For the safety of the housing in series with the high voltage winding is connected to resistor 100 MOm. Electrode plates are made of duralumin (dimensions correspond to the side walls of the hive), suspended from the hive using strips of dielectric. P plate connected to the transformer wires with high-voltage insulation.

Fig. 2 shows the appearance of the device, a thermometer and a high voltage transformer with the connected temperature sensor.

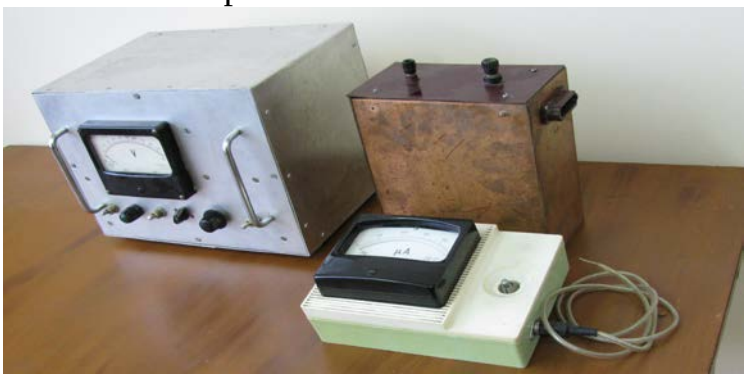

Fig.2 Instrumentation for irradiation of bees

Technical characteristics

1. The device is powered by an industrial network voltage of 220 V or battery voltage of 12V.

2. Output voltage adjustable frequency of 500 Hz to 10 kV.

3. The tension of electric field in the hive to 90-100 V/cm.

4. The power consumed by the network does not exceed 30 W.

5. The device is designed to operate at an ambient temperature of +5 to +45°C and a relative humidity less than 80%.

6. Weight of the device with a high voltage transformer 6 kg.

EMF tension selection and irradiation time of bees selection

After preliminary experiments was selected electrode placement-plates on the sides of the hive-loungers. With this arrangement, the electrodes bees almost do not worry, it simplifies the preparation and conduct of the irradiation process.

Select desired optimum tension of bees was determined mainly by the reaction of bees to irradiation and to increase the temperature in the hive. With increasing amplitude tension of the EMF in the hive there is a low frequency hum, with a further increase of the field strength comes stronger excitation of bees, which consists in expulsion bees to take off board, to enhance the sounds produced by bees.

With a further increase tensions bees going into balls, sting each other, there is a smell of poison.

Increasing the time of EMF exposure, even at moderate values of strength amplitude reaction enhances the bees, including before the above described undesirable behaviors of bees.

Preliminary experiments showed that irradiation of bees when tension 90-120V/cm for 3-4 minutes does not cause any adverse effects.

With these parameters, the action field and EMF exposure has led to an increase in temperature in the nest for 1-2 minutes at 3-8 °C.

After removal of the field temperature slowly over 40-120 minutes reduced to the initial.

Some results of EMF irradiation of bees in the apiary conditions

1. Experiments on irradiation of bees showed a marked effect of EMF on their behavior and physiological state.

2. The alternating EMF at a frequency of 500 Hz significantly increases egg laying queen bee, in some irradiated families brood appeared to 20-32% more than in the unexposed.

3. Irradiation bees had a positive impact on their productivity. In irradiated hives were more honey, pollen than in non-irradiated in the experimental families more sealed cells (fig. 3).

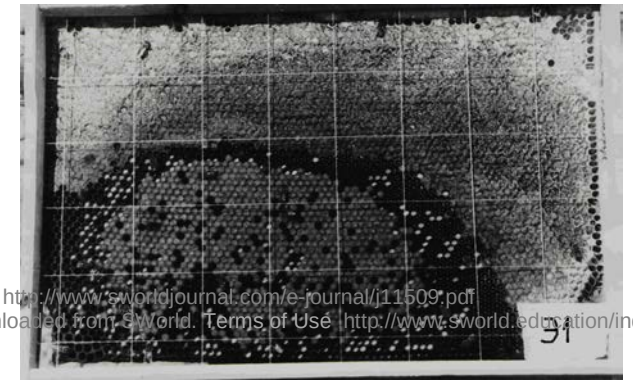

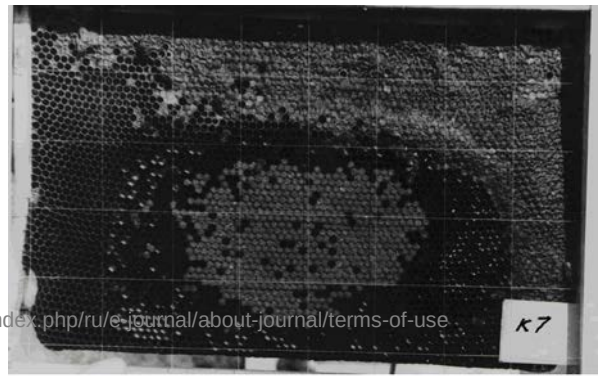

Fig. 3. Typical framework from irradiated (E1) and unexposed (K7) hives

4. Weakened family recover from foulbrood, responded to EMF significantly less than the strong, healthy.

5. It is noted that in the first 3 days the irradiated bee flight activity was lower and on subsequent days is significantly higher than that of unirradiated controls hives. It is possible that in order to prevent the oppression of bees in the first days of exposure should be started at a lower intensity, gradually increasing it.

6. In the control families were found wingless and with other defects bees, which indicates a large number of ticks. In the experimental group families such phenomenon was not observed, which is associated with an increase in temperature (an average of 3-8 °C) when irradiated bees.

7. Use of EMF in beekeeping practice perspective, since the intensity of the activities of bees increases significantly, enabling to increase the productivity of the family.

8. It is necessary to continue to study further the effect of EMF on bees, determining the optimal mode irradiation, depending on the physiological state of the bees and bee colony development phase.

References:

1. Еськов Е.К. Экология медоносной пчелы. – М.: Росагропромиздат, 1990.

2. Еськов Е.К. Поведение медоносных пчел. – М.: Колос, 1981.

3. Броварський В.Д., Багрій І.Г. Розведення та утримання бджіл. – К.: Урожай, 1995.

4. Кияновський О.М. Вплив електромагнітного опромінення на продуктивність бджолиних маток. Сборник научных трудов SWorld, т.37, 2013.

5. Коноплев П., Мартынюк А. Термометр с линейной шкалой. Радио, 1982, №2.

J11509-004

Rakoid O.O., Bondar V.I.

SPECIAL RAW MATERIAL ZONES AS AN EXAMPLE OF SUSTAINABLE LAND MANAGEMENT

National University of Life and Environmental Sciences of Ukraine, Kyiv, Heroyiv Oborony 15, 03041

Abstract. In this paper we describe some aspects of implementing the practice of special raw material zones in Ukraine as an example of sustainable land management in transition economies.

Key words: special raw material zones, agricultural land, best practice, sustainable land management.

Such great attention that is recently paid to the problem of desertification and degradation of land in Ukraine, is caused by increasing of anthropogenic influence on soils, irrational using of land, imperfection of agrarian technologies, social disturbance of environmental condition and awareness of role of soils in secure of food and ecologic security of the country.

Among the ways of solution of problems, concerning the irrational land using nowadays the main one is to increase the efficiency of agricultural land using through launching of modern technologies and environmental protective measures.

At the same, time taking into consideration rather high level of pollution and degradation of arable soils as well as consequences of Chornobyl catastrophe, Ukraine just like other countries of transition economy has very actual issue is to secure quality and ecologic security of food products. It’s a well-known fact that the population health, life expectancy, labour and intellectual potential of society depend on these rates. These social-and-economic factors determine the necessity to rebuild radically the character and structure of land using in Ukraine. The first thing is to change the development direction of agriculture taking into account the sequence of ecologic, social and economic demands.

The example of implementation of efficient policy and practice in Ukraine aimed at prevention of desertification and degradation of agricultural land as well as at improvement of social conditions of rural population, and which are economically favourable for agricultural producers are the special raw material zones.

„Special raw material zones are regions or separate farms that meet the conditions of manufacturing of plant and animal production suitable for making products of children and dietary food” [1].

Main requirements to secure stable functioning of such agricultural enterprises are: prohibition of using of synthetic pesticides and mineral fertilizers; maintenance of optimal level of soil fertility; application of system of manuring and protection of plants with using of elements of organic agricultural technologies.

Definition in kind and conditions of functioning of special raw material zones is regulated by present laws of Ukraine. Territories that are suitable for creation of special raw material zones are determined on the grounds of evaluation results of sanitary-and-hygienic and zonal agro-chemical rates of soil taking into account information about degrees of loads by pesticides and agro-chemicals, emissions from

industrial enterprises and objects that can pollute the environment.

Conformity of agricultural land to requirements of special raw material zones is estimated according to criteria and norms, developed by authors [2] and approved by State Standard of Ukraine [3]. Such complex preventive estimation of the territory is carried out by authorized scientific-and-technical institutions.

Agricultural enterprises that meet the demands, decisions of commissions created under all regional state administrations get the status of a special raw material zone and right to state financial subsidy for supply of raw material for production of children and dietary food. The status of a special raw material zones is awarded to the producer for the term of 5 years under annual control of meeting the demands.

Practice of special raw material zones is on the grounds of financial interest of producers (subsidies from state budget for raw material that is used in production of children and dietary food and meets the demands provided by law). State subsidies allow to compensate the expenses concerning the increase cost of getting a unit of production and also to spend some assets for development and modernization of production.

Distribution of financial subsidies for supply of raw material used in production of children and dietary food support the producers who launch modern environmental and high technology methods of agriculture for getting the production that meets the demands of quality and security.

They began to implement such practice in the first agricultural enterprises in 2006. But only after confirmation of the Decree of Cabinet of Ministers of Ukraine “On Approval of Order of Awarding Status of Special Zone of Manufacturing of Raw Material, Used in Production of Children and Dietary Food (2007) its launching became spread.

During 2007-2012 the status of a special raw material zone has been awarded to 86 enterprises with total area of 267, 9 thousand hectares (for comparison, the total area of all agricultural land in Ukraine is 41650 thousand hectares).

Special raw material zones function in all nature zones of Ukraine. The major part of such enterprises is located in the zone of Forest-steppe, the minor part is in zone of Polissia and only 6 such zones are in the south of Ukraine in Steppe. Natural and climatic conditions differ much in temperature regime, degree of dryness of the territory, soils and topography. Process of land degradation that in Ukraine mainly concerns the agricultural activity is showed in different ways. For example, in Polissia the most widespread are overmoisture and acidity of soils, in Forest-steppe and Steppe these are water-erosion process and deflation. That is why in each case during the estimation of the territory of enterprises their zonal differences are taken into account.

Social-and-economic conditions of population at the places of launching of the practice are also different. Ownership form can be both state and private one; the leading form of land using is tilled soil. The area of enterprises that have the status of special raw material zones are from 100 hectares (mostly not very big farms in vegetable planting) to 5 thousand hectares (mostly feed crops). All agricultural enterprises as it were mentioned above need to meet main requirements concerning special raw material zones.

This practice allows solving a lot of problems, the main of which are following:

1) It allows to prevent further development such degradation process as soil contamination, dehumification, soil erosion, agrochemical depletion. So due to prohibition of using agrochemicals of synthetic origin and strict control of sanitary-and-hygienic rates they prevent contamination of soil, water and plants by residues of pesticides, hard metals, radionuclides. Keeping of crop rotation, increase of using of organic fertilizers, planting of perennial feed crops assist on maintenance and larger contents of humus.

Due to higher contents of organic things in soils their water balance gets better, they become more resistant water stress and drought, the possibility of water erosion diminishes. Mode of activity in the special raw material zone also assists on higher fertility degree of soils, higher supply level of nitrogen, phosphorous, potassium, microelements.

2) It secures stable land management by means of optimization of planting and cattle breeding within the zone, introduction and keeping of scientifically grounded crop rotations, application of optimal doses of agrochemicals of organic origin.

3) Practice of special zones for planting the most productive and high quality crops is one of key measures that assist on adaptation of agricultural production to climatic changes. Functioning experience of such zones shows their great potential in softening of consequences of climate change. That is the increase of carbon contents in the soils of special zones is reached by means of better tilled land management and pastures, optimization of sown areas, prevention of degradation process development. Besides that as a result of more rational using of nitrogen fertilizer and organic residues and atmospheric nitrogen, the emission of nitrogen oxide is less.

Reduction of areas under monocultures, increase of beans sowing, wider areas under one-year and perennial herbs totally assist on increase of structure variety of plants and microorganism activity and, as a result, it allows to multiply of agro biodiversity as a part of biodiversity.

4) It assists on increase of quality and security of the raw material for production of children and dietary food, it prevents contamination of food products by toxic elements, radionuclides, pesticides.

5) It allows in the most efficient way to use existing resources and organize agricultural production aimed at maintenance of optimal condition of ecosystems at the social, ecologic and economic levels. In particular, it secures permanent employment and stable income of the employed population and also assists on knowledge about the using of modern ecologically friendly technologies and ecologic consciousness in general among village population. Consumption of high quality and safe products assists on decrease of sickness rate of the population.

In Ukraine the interest of landowners and land users in implementation of measures aimed at prevention of negative process that worsen the condition of land can be reached only on terms that such actions will be profitable for them. The efforts to cause some interest only by the way of establishing correspondent liabilities don’t encourage landowners and land users to certain actions. The more so the measures concerning the prevention of worsening of land quality, its contamination, spoilage or degradation demand considerable material expenses (for purchase of new equipment,

construction of security buildings, development of plans of maintenance the soil fertility etc.).

Only practical implementation of measures of economic stimulation of rational use and security of land provides interest of landowners or land users in realization of nature protective measures that are profitable for them.

At the national level it is very important to maintain further development of services of distribution of knowledge and experience with the purpose of popularization of principles of stable and efficient agriculture. Introduction of good agricultural practice is a key element in this process. That is why the interest of landowners and leaders of agricultural enterprises in the transfer to ecologically friendly agricultural technologies is also a very important factor of practice success, not less than the economic interest.

Besides that the other important condition that will assist on successful implementation of leading practice in the countries of transition economy is their state support at the national and regional levels by means of adoption of correspondent laws and programs. Support of highly developed and balanced rural economy is very important for environmental protection and keeping natural resources, including long-term preservation of soils and landscapes. But in countries of transition economy it is not easy to introduce the programs of environmental protection in agricultural sphere in modern economic situation.

New practices can be successfully implemented only if they also assist the amelioration of production and life standards. More stable agriculture that optimizes productivity, agricultural practice and expenses use would make positive influence on soils and land resources management.

Literature:

1. Спеціальні сировинні зони з виробництва якісної і безпечної сільськогосподарської продукції: створення, функціонування (науково-методичні рекомендації) // М.Д Мельничук, Н.А. Макаренко, О.О. Ракоїд, В.І.Бондарь та ін. – К., 2012. – 32 с.

2. Патент на полезную модель «Способ определения соответствия земель сельскохозяйственного назначения требованиям к специальным сырьевым зонам» (№ 33772 от 10.07.2008 г., авторы – Макаренко Н.А., Ракоид Е.А., Вдовиченко А.В.).

3. ДСТУ 7244:2011 Якість ґрунту. Спеціальні сировинні зони. Загальні вимоги.

Статья отправлена: 14.11.2014г.

J11509-005

Yashchuk N.

ECONOMIC AND TECHNOLOGICAL LONGEVITY OF GRAIN WINTER RYE

National University of Life and Environmental Sciences of Ukraine
Kyiv, Heroyiv Oborony, 13, 03041

Abstract. The changes of "falling number" and germination capacity of winter rye varieties Intensive 95, Intensive 99 and Siverske during storage under cooling conditions were investigated. Quality of grain winter rye during the first year of storage apply to 1-2 class but following years of storage decrease quality to 2-3 grade of class. Economic longevity of grain rye of investigated varieties under cooling conditions saver within 1-2 years depend on the sorts and state of the grain but biological – 5 years. A statistically significant of effect on change "falling number" and germination capacity of rye all investigating factors was established. Investigating varieties of rye kept technological longevity during 5 years what allowing their used on food and feed purposes. Technical purposes of grain rye kept only for 2 years.

Key words: winter rye, variety, longevity, storage period, germination capacity, "falling number".

Introduction. In practice, storage and rational use of each batch of grain and seeds essential role belongs permissible level of longevity and term storage of grain mass cultures. Longevity is the period during which the consumer properties are stored grains and seeds.

Review of the literature. Longevity of grain is biological – the period during which retain the ability to germinate even single seed; economic – the period of storage of seeds during which they stay standard quality germinating capacity and comply with of state standards; technological – a term storage parties of grain, during which their properties are stored for use in food, forage or technical purposes [3-5].

Most seeds of plants belonging to the group mezobiotykiv that under favorable conditions remains viable for 5-10 years. This group includes the seeds of rye, which has a slightly lower biological durability – 3-6 years (depending on storage conditions) compared with other members of the group [1, 3, 5, 6].

Analysis of samples of food grain rye, which was kept in normal production conditions, showed a significant loss of germination capacity (69 %) and energy of germination (62 %) of the first year of storage. After 10 years of germination capacity was 12.5 %, energy of germination – 8 %, and after 12 – 2 and under 1 %. When storing dry seeds in conditions of lowering the temperature of biological longevity usually is greater, but the low percentage of germination economic value it does not have [1, 5].

In connection with what grain of rye most favorable to germination, compared to other grain crops, the most important technological indicator for him is "falling number". During storage grains of rye as a result of the collapse of processes it accumulates malic, oxalic and other acids, resulting in increased titrated acidity of flour. Increased titrated acidity promotes decrease activity of amylolytic enzymes

flour and as a result, increase "falling number". With the increased of relative humidity (70 % or more) and grain humidity (14.5 % or more) acidity begins to increase in a linear depending [2, 7].

Simultaneously on the durability of winter rye have an impact as storage conditions and initial quality products, which, in turn influences varietal characteristics, soil and climatic conditions, growing technology and post-harvest handling [1-5].

Baseline data and methods. Study was conducted within 2007-2013 in the laboratory of department of storage, processing and standardization of plant products after name prof. B.V. Lesika of National University of Life and Environmental Sciences of Ukraine.

For the analysis of were selected samples grain of the three sorts of winter rye: Intensive 95, Intensive 99 and Siverske, grown in the State enterprise "Experimental farm" "Chabany" ESC "Institute of Agriculture, of UAAS" in 2007-2008.

Grain was stored in of flax bags under cooling conditions in cold rooms KHS-2-6M (temperature + 5 + 10 ^{0}C) in the dry state (initial humidity of grain 13.0- 13.5 % and relative air humidity 55-60 %) and in a state of moderate dryness (initial humidity of grain 15.0-15.5 % and relative air humidity 65-70 %).

The program envisaged conducting research estimation of quality before storage (control), after one, two, three, four and five years of storage of winter rye.

Determination of humidity of carried in accordance with GOST 13586.5-93, ability to germination and germination capacity – ISO 4138-2002, and the falling numbers – GOST 30498-97.

Results. Discussion and analysis. Significant indicator of sowing and technological properties is the ability to germinate, which per standard must be at least 92 %. Technological character index acquires when assessing grains of rye as raw materials for the manufacture of malt, starch and alcohol. Therefore very important to know about changing ability to germinate seeds during storage of winter rye growers-plant breeders and processors-technologists [4, 5].

The ability to germinate the investigated varieties of winter rye before storage was 93-94 %, allowing using for processing into malt of rye at beginning storage. During storage there was a gradual decrease in of this index (Table 1). After one year of storage at dry state reduced ability to seed germination was 1-3 %, while the state average dry 3-9 %, if the first case insignificant changes (within the error of the experiment), in the second quite significant. At the same time suitable for production of malt varieties of rye grain were Intense 99 and Siverske for dry state. The two-year storage for dry state led to a of further decline of index at the sorts Intensive 95 and Intensive 99 by 7 % compared to the first year of storage and remained almost unchanged percentage of germinated grains at sort Siverske. For seed moisture 15.0-15.5 % ability of germination decreased by 3-7 % in all the investigated varieties.

Table 1

Changing the ability to germinate seeds of winter rye different sorts during storage

State (humidity) of grain	Before storage (control)	Duration of storage, years				
		1	2	3	4	5
Intensive 95						
Dry state (13.0-13.5%)	93	90	83	67	44	15
State of moderate dryness (15.0-15.5%)	93	84	77	28	14	6
Intensive 99						
Dry state (13.0-13.5%)	94	93	86	56	30	8
State of moderate dryness (15.0-15.5%)	94	87	82	43	21	7
Siverske						
Dry state (13.0-13.5%)	94	93	91	65	30	11
State of moderate dryness (15.0-15.5%)	94	91	88	44	23	8

For moisture 13.0-13.5 % after three years of storage watched reduced ability to germinate in 16-30 % (depending on variety) compared with the second year of the lowest after three years of storage at a sort Intensive 99 – 56 % of sprouted seeds. For moisture 15.0-15.5 % decrease of was 39-49 %.

After four years of storage, ability to germination of all investigated variants of rye decreased in average to 20 %. The highest percentage of sprouted grains defined at a sort Intensive 95 for dry state – 44 % and the lowest in the same variants for a medium dry – 14 %.

At the end of storage ability to germination of winter rye has decreased by 20-25 %. The highest values of the capacity for germination after five years storage seed was at sort Intensive 95 and for dry state of grain – 15 %.

During all of period of storage influence of the state of corn on his ability to germinate observed at a sort Intensive 99: the difference between dry and medium-dry state was within 1-13 %. The biggest impact moisture on the studied parameters observed at sort Intensive 95: the difference in ability to germinate for grain different state was – 6-39 %.

An important indicator of the quality of rye believes its germination capacity, which is crucial in the loop playback, as well as an important characteristic for use in the production of grain and malt sprouts. It is often a measure of its condition during storage and calls attention in terms of biochemistry and physiology of plants. The germination capacity – the number of seeds that sprouted in the set for a certain culture period (7 days for rye) and describes the ability to form normal seedlings developed for optimal germination conditions [3, 4, 6].

Initial indicators germination capacity of rye all investigated sorts meet the requirements of the standard to sowing qualities (germination capacity should be 90 %) (Table 2). Sort Intensive 95 at the beginning of storage was slightly lower technological and economic longevity.

Technological and economic longevity of rye at sort Siverske available at states

retained for two years, at sort Intensive 99 – one year and at sort Intensive 95 only dry state of grain for one year.

Table 2

Dynamics of germination capacity of winter rye different sorts during storage

State (humidity) of grain	Before storage (control)	Duration of storage, years				
		1	2	3	4	5
Intensive 95						
Dry state (13.0-13.5%)	94	92	85	72	46	23
State of moderate dryness (15.0-15.5%)	94	89	81	32	24	8
Intensive 99						
Dry state (13.0-13.5%)	95	96	89	60	35	13
State of moderate dryness (15.0-15.5%)	95	92	86	49	28	10
Siverske						
Dry state (13.0-13.5%)	95	95	92	71	45	17
State of moderate dryness (15.0-15.5%)	95	95	91	52	31	11

The significant decrease in germination capacity was observed after three years of storage. According to dry state of grains decrease of was 22-25 % at sort Siverske and Intensive 95 and 36 % at sort Intensive 99 from baseline similarity. As the average dry reduction was even greater germination capacity to 44-63 % from baseline in all the studied sorts.

After four years of storage even in the dry of state grain germination capacity decreased to 45-46 % at sort Intensive 95 and Siverske, and 35 % at sort Intensive 99. Final storage period was characterized the dry of state dryness 17-23 % similar seeds at sort Intensive 95 and Siverske and 13% at sort Intensive 99. As state of moderate dryness of germination capacity remaining was 8-11 % depending on the variety. That seed after five years of storage characterized biological longevity, but economic and technological longevity (as a raw material for the production of malt) it did not.

Analysis of variance dynamics of germination capacity of rye during storage showed a statistically significant impact on this index term storage, sort and state grain. For germination capacity dynamics of rye F_{calc} = 188.95 (duration of storage) > = 2.60 F_{crit}; F_{calc} = 5.00 (sort, the state grain) > = 2.60 F_{crit}. More substantial effect on the studied parameters again had duration of storage. It is noted that the pattern of germination capacity of winter rye by dryness was significantly lower impact life (F_{calc} = 171.41) and no effect at all sort (F_{calc} = 2.15) compared with the state average dry (duration of storage F_{calc} = 283.33 and sort F_{calc}= 6.93 at F_{crit}= 4.10).

An important indicator of technological grain quality of winter rye is "falling number". This indicator characterizes the state of carbohydrate-amylase complex, activity of amylase enzymes. Also "falling number" is one of the key indicators in determining the class quality of rye and its function [2, 6].

Before storage grain rye sort Siverske few indicators "falling number" – 185 s Intensive 95 – 166 s and the sort Intensive 99 – 158 s (Table 3). This grain belonged

to the second class quality, making it possible to use it in baking purposes.

Table 3

Dynamics "falling number" of winter rye different sorts during storage

State (humidity) of grain	Before storage (control)	Duration of storage, years				
		1	2	3	4	5
Intensive 95						
Dry state (13.0-13.5%)	166	192	174	165	150	125
State of moderate dryness (15.0-15.5%)	166	194	179	173	167	142
Intensive 99						
Dry state (13.0-13.5%)	158	182	178	170	152	118
State of moderate dryness (15.0-15.5%)	158	190	182	174	164	132
Siverske						
Dry state (13.0-13.5%)	185	212	205	199	178	144
State of moderate dryness (15.0-15.5%)	185	208	207	204	190	165

After one year of storage rate increased slightly (by 23-32 s) and grain sort Siverske was 208-212 s (1 class quality). In sort Intensive 95 and Intensive 99 although increased rate "falling number" but class changes have occurred not. After two years of storage rye "falling number" slightly decreased at a sort Intensive 99 and Siverske (for 1-8 s) and substantially at a sort Intensive 95 (15-18 s).

Within four years of storage performance "falling number" gradually declined, on average per year for the dryness of grain – for 8-10 s and a medium dry – 15-20 s. After four years, the largest decrease in observed at a sort Siverske – for 14-21 s, which resulted in the conversion of corn at a sort from 1 class to 2 class quality. Essentially reduced indicator of "falling number" after five years of storage within was 25-34 s. This grain of sort Siverske (with indicators 144-165 s) belonged 2 class quality, sort Intensive 99 (with indicators 118-132 s) – 3 class, sort Intensive 95 for dry state average (142 s) – 2 class, and the dry state (125 s) – only 3 class quality. So, after five years of storage in conditions characterized by cooling the grain rye technological longevity, allowing its use in food and feed purposes.

All subjects sorts of winter rye during the storage period higher levels of "falling numbers" were marked by a medium dry – an average of 5 seconds for three years and to 15 seconds for the fourth and fifth years of storage in comparison with dry grain condition. Higher performance "falling number" as dryness can be explained by the average acidity of rye for 15.0-15.5 % humidity.

Mathematical and statistical processing changes "falling number" of rye during storage showed a statistically significant effect on this figure all causal factors. Thus, the dynamics of "falling number" of rye F_{calc} = 96.88 (duration of storage)> F_{crit} = 2.60; F_{calc} = 43.66 (sort, state grain) > F_{crit} = 2.60. This is much more significant impact on the study had duration of storage. Established greatest impact on the

dynamics of "falling number" duration of storage (F_{calc} = 67.40 > F_{crit} = 5.05) and the condition of grain (F_{calc} = 10.35> F_{crit} = 6.61) at sort Intensive 99.

Conclusions.

Economic longevity of grain rye investigated sort under cooling conditions characterized by storage within 1-2 years depending on the sort and state of the grain and biological – 5 years.

Over the two-year period of data longest longevity and the highest rates of ability of germination and germination capacity for all state of grain characterized by sort winter rye Siverske, and the lowest – Intensive 99.

The first year was characterized by higher storage requirements to 1-2 class and the following years a gradual decrease to 2-3 grade quality. Highest index of "falling number" throughout the storage period in grain variety Siverske and for medium dry is established.

Technological longevity, including the use of food and feed purposes, grain of rye investigated sort within 5 years, and the use for technical purposes only for 2 years.

Literature:

1. Zakharova L.G. State of viability of seed of rye after five-year storage in the controlled terms / L.G. Zakharova // Scientific-tehnycheskyy bulletin. –Leningrad, 1989. – V. 189 – P. 52-55.

2. Kazakov E. Biochemistry of grain and products of bread / E. Kazakov, G. Karpylenko. – AP: HYORD. – 2005. – 512 p.

3. Kirpa N.Y. Storage of grain and factors ego longevity / N.Y. Kirpa // Converting and storage of grain. – 2008. – № 3 (105). – P. 31-32.

4. Podpryatov G.I. Longevity of winter rye grain under different storage modes / G.I. Podpryatov, N.A. Yashchuk // Scientific Bulletin NULiES Ukraine № 145. – 2010 – P. 263-274

5. Trysvyatskyy L.A. Technology of reception, treatment, storage of grain and products of his processing / L.A. Trysvyatskyy, B.E. Melnyk. – M.: Kolos, 1983. – 351 p.

6. Tumanovskaya N.B. Research of germination as an index of technological properties of grain: abstract of thesis on the competitions of scientist of degree of candidate of engineerings sciences / N.B .Tumanovskaya. – Moscow, 1969. –33 p.

7. Chernykh I.V. Vliyanie to acidity of water-flour suspensoids on activity of amylolytic enzymes / I.V. Chernykh // Storage and processing of grain. – 2006. – № 11 (89). –P. 41-42.

J11509-006

Bober A.V.

ECONOMIC AND TECHNOLOGICAL EVALUATION OF AROMA VARIETIES OF HOP WHICH REGISTERED IN UKRAINE

National University of Life and Environmental Sciences of Ukraine
Kyiv, Heroyiv Oborony, 13, 03041

Abstract. This paper presents the results of research integrated assessment aromatic hops varieties of different maturity groups for economic, technological and commodity indices. Established that among the recognized varieties available as high-quality varieties and those with low quality and contribute to market saturation foreign raw materials. The presence of high-quality varieties of hops aromatic type and appropriate natural resources makes it possible to provide for its own brewing industry domestic raw materials and expanding its use in other industries: perfume, pharmaceutical, liquor and others.

Key words: Hops, quality, aromatic varieties economic indicators merchandising performance, technical indicators, a-acid, bitter substances, polyphenolic substances, essential oil, xanthohumol.

Issues of the day the brewing industry of Ukraine is providing high-quality domestic raw material of hop that would not inferior in quality to foreign analogues. Use cones of hops and processed products made from varieties Ukrainian selection, promote the development of Ukraine hop as a whole, reducing the cost of beer through the use of domestic raw material of hop and strengthen Ukraine's position in the global market hops and beer. Hop cones are the raw material for the manufacture of all hops drugs.

One of the decisive factors determining productivity, quality and safety of nutrients to the use of its products are consumer grade selection. In every culture, entered in the Register of Plant Varieties of Ukraine, several varieties, and some of them amount exceeds reasonable limits.

Based on the fact that hops are the most specific, indispensable and most expensive type of raw material for the production of beer, high-quality products can be obtained only if the use of certain hop varieties breeding, due to the peculiarity of their biochemical composition.

All varieties of hops are divided into two types: aromatic and bitter. Cones aromatic hop varieties have thin, tender, noble hop aroma and bitter varieties – rough sharp odor. The main differences between these groups are varieties of chemical composition cones [8]. They are distinguished not only by the content of the total number of bitter substances, alpha acids, polyphenols, essential oils, but also for their quality and composition ratio. An important indicator is the ratio of grading individual components of beta acids to alpha acids, which is aromatic varieties at 1. Grades of total aromatic resins ranging 12–17 % alpha acids – 2– 6 %. The content of alpha acids in general resin composition is 25–30 %.

Presently preferred varieties that can provide quick profit, high profitability and demand in foreign markets. Competitive variety of hops should be at least 20–25 kg / ha yield sustainable raw materials contain at least 7.10 % alpha acids, collected

mechanized, have resistance to pathogens. Also recently increased interest are varieties with a high content of essential oil and xanthohumol, which allows you to use these varieties in other sectors of the economy [6,11].

To select the available varieties of hops best for a particular purpose, you need to have this sort of rather large bank objective comprehensive characteristics. The varieties of hops must meet many criteria, the main of which – a high and stable yield, resistance to pests and diseases, suitability for mechanical intensive use, the necessary materials for brewing (alpha acids, beta acids, polyphenols, essential oils, and xanthohumol etc.). Varieties should have excellent breweries properties opportunity processed in products from hop (pellets, extracts, etc.), long stored without loss of nutrients. That is, all varieties are explored by commodity complex and economically useful traits.

The lack of a comprehensive assessment of aromatic hops varieties of different maturity groups zoned in Ukraine promotes the cultivation of non-competitive domestic varieties, which weakens the internal market and hinders access to the outside. In this regard, there is a problem-depth study of the state of the test questions.

The purpose of research is the economic and technological assessment aromatic hop varieties registered in Ukraine and identifying competitive varieties in the domestic market.

Material and methods research. The technique is based on research systematization and integrated evaluation of information materials (data for 2003–2013 gg.) Derived from the scientific literature, data state testing, research institutions and own studies [1–3, 4,5,7,8,9,11].

Results. The main criteria for measuring efficiency in crop yield is per unit area and the main crop quality parameters (so-called technological performance). They are the result of the interaction of inputs (staff, equipment, land) and characterize the performance achieved organisms or plants. In such technological indicators hop yield of hops is 1 hectare and levels of production in the α-acids.

Conducted research found that recognized varieties of hops have a significant difference from the yield 1.21–2.75 t / ha. (Table. 1).

Aromatic varieties have a delicate flavor, but, unlike the bitter, contain much less the main components – alpha acids, which are the main pricing factors evaluation hops and hop preparations and for which the hops used in brewing. According to the table. 1, a number of aromatic varieties of bitter substances ranging from 12.5 to 32.5 %. The content of alpha acids in these varieties ranges from 3.1 to 9.8 %. A characteristic feature of these varieties is that in addition to the high content of bitter substances, especially in grades Zhytomyrs`kyi 75, Natsional`nyi, National, Pyvovar, Slavianka, Triumf, consisting of bitter substances beta-acid fraction is much higher than the share of alpha acids.

In aromatic hop varieties Ukrainian selection of high-quality composition of bitter substances combined with delicate sweet flavor, characteristic for the best European varieties.

An important factor in the presence flavours of hop in beer is the quantity and quality of essential oil [10]. The content of essential oil in aromatic hop varieties

Ukrainian selection of different maturity groups ranging from 0,4–2,5 ml / 100 g (Table. 1). The highest oil content of aromatic varieties of hop varieties with Slavianka, Triumf, Starovolyns`kyi aromatychnyi.

In order to obtain high quality beer should be considered quantitative and qualitative composition of polyphenolic substances. Elevated levels of polyphenols in hops, which is used for obtaine hopped wort promotes higher their content in hopped wort and beer [10]. The content of polyphenolic substances hop varieties zoned in Ukraine are high in this component (Table. 1). Somewhat more content observed in polyphenolic substances grades Haidamats'kyi, Khmeleslav, Fenixs.

Quantitative content of xanthohumol in hops cones depends on the variety and selection ranges from 0.27 to 0.77 % (Table. 1). Comparing these data with survey data M. Bienda [12] It may be noted that foreign varieties of hops xanthohumol content varies between 0.2–1.0 %, which is on par with domestic varieties. Elevated levels of xanthohumol in domestic varieties of hops enhances their use and compete in the domestic and international markets.

The final stage of assessing the quality of hop varieties are brewing their evaluation. As can be seen from Table. 1 almost all varieties of hop aroma of brewing with the highest evaluation 22,0–25,0 points. Thus in each group there are varieties of hops with lower and higher rates brewing assessment relative to the average.

Conclusions:

1. Among zoned aromatic varieties of hop varieties are available as high and those with low quality and contribute to market saturation foreign raw materials.

2. Given the economic, merchandising and technological indicators varieties of hops, note that the total population in the most competitive group of aromatic varieties of early maturing recognized Fenixs; middle – Natsional`nyi, Slavianka, Starovolyns`kyi aromatychnyi, Zahrava, Triumf, Khmeleslav; late – Haidamats'kyi. For complex traits they are not inferior to foreign varieties, and in some figures are well above the best world analogues.

3. Assessment of quality aromatic varieties of hop cones should be carried out before laying on the storage and after storage before intended use, but the quality can vary and varieties, which favored before storage after storage can have different qualitative and quantitative composition of the main components.

Table 1

Economic and technological characteristic aromatic varieties of hops different maturity groups

Name of the variety	Crop capacity, t / ha	The content of bitter substances,%	The content of alpha-acids,%	The content of beta-acids,%	The content of total polyphenols,%	The content of essential oil (ml /100 g)	The content of xanthohumol ,%	Breweries evaluation (ball)
Early-maturing varieties								
Violas	1.76	17.7	5.5	5.3	4.8	0.50	0.38	20.5
Fenixs	1.83	18.5	5.4	5.9	7.2	0.70	0.32	20.0
On average	1.80	18.1	5.5	5.6	6.0	0.60	0.35	20.3
Middle-grade								
Vydybor	1.68	18.5	5.6	6.1	5.0	1.10	0.37	21.0
Zhytomyrs`kyi 75	1.86	24.5	7.0	11.9	5.9	0.80	0.42	22.3
Zahrava	2.55	24.5	6.1	6.1	6.5	1.60	0.65	21.2
Zlato Polissia	1.62	19.0	5.0	5.0	6.4	0.75	0.77	22.0
Klon 18	1.21	12.5	3.1	3.4	6.6	0.40	0.45	21.2
Natsional`nyi	2.75	29.5	9.8	7.5	6.2	0.50	0.67	22.0
Oskar	1.91	24.0	6.0	6.4	6.0	1.65	0.37	22.3
Pyvovar	2.19	25.0	5.9	10.6	6.4	0.80	0.52	22.5
Polisianka	1.80	22.0	6.8	7.2	4.0	1.52	0.45	22.4
Regent	1.65	15.4	5.4	6.0	3.8	0.45	0.43	22.0
Slavianka	2.72	24.0	6.0	7.0	5.7	2.35	0.50	22.2
Starovolyns`kyi aromatychnyi	2.70	26.0	7.0	6.5	6.2	2.00	0.48	22.0
Triumf	1.95	32.5	8.0	11.0	5.8	2.50	0.40	22.5
Khmeleslav	2.14	20.7	6.2	6.5	7.5	1.50	0.27	22.5
On average	2.05	22.7	6.3	7.2	5.9	1.28	0.48	22.0
Late varieties								
Haidamats'kyi	2.67	21.7	6.5	7.8	7.4	0.65	0.32	21.6
On average	2.67	21.7	6.5	7.8	7.4	0.65	0.32	21.6
On average, the group of aromatic varieties	2.06	22.1	6.2	7.1	6.0	1.16	0.46	21.8

References:

1. A. Bober Comparative evaluation brewing qualities cones and hop pellets type 90 aromatic and bitter varieties of bitter substances content / AV Beaver // Scientific reports NUBiP. – K., 2011., № 4. – [electronic resource] // Access: http://nd.nauu.kiev.ua.

2. A. Bober Comparative evaluation brewing qualities cones and hop pellets type 90 aromatic and bitter varieties over the content of polyphenol compounds / AV Beaver // Scientific Bulletin NUBiP Ukraine. – K., 2011., – № 162. Part 2 – P. 196–199.

3. A. Bober Comparative evaluation brewing qualities cones and hop pellets type 90 aromatic and bitter varieties of content and composition of essential oil / AV Beaver // Scientific Bulletin NUBiP Ukraine. – K., 2011., – № 162. Part 2 – P. 209–213.

4. Reference hop / [Shabranskyy A.S., Shulyar V.M., M.G. Kovtun. et al.]. – Exactly: Woodlands, 2000. – 224 p.

5. State Register of plant varieties suitable for dissemination in Ukraine in 2013 – K.: Aleph, 2013. – 464 p.

6. An innovative way of development hop / [ed. I. Savchenko]. – Exactly: Ruta, 2011. – 237 p.

7. Product hop varieties approved for distribution in Ukraine / [I.P. Shtan'ko, V.V. Shablykino, K.P. Mykhaylichenko et al.]. – Exactly, "Polesie", 2010. – 68 p.

8. Lyashenko N.I. Biochemistry hop and hmeleproduktov / Lyashenko N.I. – Exactly: Polyssya, 2002. – 388 p.

9. Lyashenko N.I. Fyzyolohyya and biochemistry hop / N.I. Lyashenko, N.G. Mikhailov, R.I. Rudыk. – Exactly: Polyssya, 2004. – 408 p.

10. Lyashenko N.I. Brewing quality hops varieties Ukrainian selection. N.I. Lyashenko, L.V. Protsenko // agroindustrial production Polesie. – 2011. – № 4. – P. 81–85.

11. V.V. Shablykino Assessment of productive capacity in regional varieties of hops. V.V. Shablykino, I.P. Shtan'ko, K.P. Mykhaylichenko // agroindustrial production Polesie. – 2009. – № 2. – P. 43–47.

12. Biendl M. Einsatz eines xanthohumolreichen nopfenproduktes bei der vierherstel lung / M.M. Biendl, W. Mitter // Brauwelt. – 2000. – № 46. – S. 2006.

J11509-007

Starodubtsev V.M., Bogdanets V.A.

NEW VISION FOR MAPPING AND ESTIMATION OF SOIL COVER HETEROGENEITY IN PLAIN FOREST-STEPPE ZONE

National University of Life and Environmental Sciences of Ukraine, Kyiv, Heroiv Oborony st., 15

Abstract. The essential heterogeneity of soil cover in areas with microdepressions of topography in the plain Forest-Steppe zone of Ukraine is revealed. According to water regime and properties soils of flat areas diagnosed as typical chernozem, on the slopes – meadow-chernozem, at the bed of depressions - chernozem-meadow and meadow. In areas without expressed microdepressions significant heterogeneity of soils is found in a depth of carbonates, and therefore - in their properties and fertility. This requires improving the methods of large-scale and detailed soils maps compiling and correction of methods in perennial experiments in agriculture establishing.

Keywords: soil, microdepressions, carbonate, heterogeneity, Forest-Steppe.

Introduction (analysis of the problem). Microdepressions on the territories of Forest-Steppe zone, where plain topography (relief) dominate, play important role in formation of landscapes, soil cover, agricultural use of such lands. This role is highly underestimated so far, and the nature and such microdepressions functioning is fully undiscovered. In soil science more attention is paid to redistribution of precipitation water in relief on the plains with microdepressions, to different soil moisture of these depressions and adjacent areas, to its filtration in groundwater and their level increase. Agricultural development of fields with microdepressions is complicated because of the long soil overmoistening in slopes and bottom of depressions. There is a need for different deadlines of cultivation in certain parts of the field. Soils of depressions have markedly different properties and fertility.

Microdepressions of relief are widely distributed in the left bank of the Forest-Steppe zone of Ukraine, where a complicated complex of the hydromorphic, sodisidy affected (alkaline), solodized and saline soils are spread [5,6]. In the genetic aspect the K.K. Giedroyts theory on forming of solodized soils with participating of processes of primary alkaline soils desalinization in microdepressions is yet dominated under analysis of such soil cover [2]. Our investigations also show that a large number of microdepressions are spread in the right-bank part of the Forest-Steppe zone, in particular in Scientific Research Farms (SRF) “Velykosnitynske” and “Agronomy Research Station” of NUBiP of Ukraine, on the right-bank of the Kremenchuk reservoir in Cherkasy region, in Vasilkiv district of Kyiv region and in other territories [7-9]. However, theory of K.K. Giedroyts doesn’t already satisfy needs of science and practice for conditions of right-bank part of Forest-Steppe zone.

Soils of microdepressions here are formed under influence of overwetting by precipitations and waterlogging with participation of eluvial-illuvial process and gleying, as Yarkov S.P. and Kaurychev I.S. predicted [4]. In our view, in the left-bank of Forest-Steppe zone waterlogging and gleying plays, along with salt dynamics, important role in the formation of soils of depressions [9].

However, research of scientists in various fields, including our soil science studies, show that a role of microdepressions in the environment formation is far more than just the formation of soil cover. It was found that filtration of surface water in the deep horizons, not only in vadose horizon, take place in them. Agricultural chemicals, pollutants and radioactive substances penetrate to considerable depths as well with this water. Solid flow from the surrounding areas also enters the microdepressions due to erosion, but depressions do not disappear as a result of the siltation, and they continue to operate very long time. Therefore, the theory of mass and energy transfer in these depressions as the basis for their operation attracts more and more attention now [1]. Of course, this theory needs further fundamental research.

We carry out the research since 2008 on the right bank of Forest-Steppe zone in Scientific Research Farms (SRF) “Velykosnitynske” and “Agronomy Research Station” of NUBiP of Ukraine where typical chernozems are spread. First of all, impact of water regime of depressions on soil cover heterogeneity formation, on soil properties and their productivity is studied. Microdepressions here have an area of hundreds of square meters to 1-2 hectares. In spring they flooded with melt and rain water, and during the growing season groundwater are reduced to a depth of 3-5 m. The stocks of moisture in the soil of depressions in autumn exceed the stocks in chernozems by 55% and in soil of slopes – by 14%. Consequently, soils of depressions are formed in conditions of wash water regime that affects their properties, morphological features and productivity. First of all, under such water regime carbonates are leached of the soil profile at a depth of 1-2m and deeper, and the reaction of the soil medium (pH) decreases to weakly acid. In case of shallow groundwater, they can be displaced in the surrounding area, increasing content of carbonates in chernozems. Stocks of humus in soils of studied depressions increased by 38.4 t / ha at the bottom of depressions and by 16 t / ha - at their slopes [7-9]. According to morphological features soils of the depressions’ bed we diagnose as chernozem-meadow and meadow, and soils of slopes - as meadow-chernozem. Soil fertility in depressions depends mainly on their depth and duration of spring’s flooding and summer’s waterlogging. In 2010 a yield of winter wheat in depressions with 2m depth was absent at all, on the slope of depressions it amounted 50-60% of the yield on the plain. And only in shallow depressions (0.5 m) winter wheat crop was larger than on the plain [9].

Input. Taking into account the already studied essential effect on soil formation of microdepressions, which are well defined in relief, we tasked to investigate the possible heterogeneity of soil cover on the relatively plain sections of fields as well. And based on the results of the study we plan to evaluate the reliability of soil maps of flatlands with microdepressions composed by "classical" methods [3]. For this study we selected the field in the SRF "Velykosnitynske" with typical chernozem, where long-term agrochemical and soil science field experiments were held (Fig. 1).

Fig.1. Experimental plot in SRF "Velykosnitynske" with points of soil's testing.

The determining of the depth of carbonates in the soil profile as one of the most important diagnostic signs in plain Forest-Steppe soils mapping was laid in the basic this study. Points of studying (total 28) are placed on the area of over 17 hectares as 6 lines. The geographical coordinates of points were determined with GPS-receiver "Garmin" (Fig.1). Soil samples were selected by hand drill, the presence of carbonates in the soil was determined by 10-% HCl. The results were analyzed on a PC using the Q-GIS program.

Results. Discussion and analysis. Determination of the carbonate horizon depth in profile of soils, which are displayed on the existing map as the typical loamy chernozems, showed, that the depth varies from 35 cm to 200 cm (Table 1). Carbonates are not found up to 200 cm in two points, but the determination was conducted only to this depth.

Table 1.

Depth of carbonate horizon in the soil profile.

№ of point	Date of observation with GPS-receiver	Coordinates of points	Depth of carbonates
060	01.07.2010 9:56:41	N50 05.496 E30 02.849	60
062	01.07.2010 10:13:05	N50 05.519 E30 02.829	60
063	01.07.2010 10:15:46	N50 05.543 E30 02.808	105
064	01.07.2010 10:26:04	N50 05.567 E30 02.785	95
065	01.07.2010 10:35:12	N50 05.594 E30 02.761	80
067	01.07.2010 10:54:20	N50 05.564 E30 02.683	110
069	01.07.2010 11:05:00	N50 05.542 E30 02.706	150
071	01.07.2010 11:17:42	N50 05.521 E30 02.726	75
072	01.07.2010 11:26:49	N50 05.499 E30 02.746	60
073	01.07.2010 11:33:23	N50 05.471 E30 02.772	60

074	01.07.2010 11:39:19	N50 05.439 E30 02.702	50
075	01.07.2010 11:44:52	N50 05.460 E30 02.682	60
076	01.07.2010 11:50:24	N50 05.483 E30 02.662	80
077	01.07.2010 11:56:37	N50 05.504 E30 02.644	55
078	01.07.2010 12:03:46	N50 05.540 E30 02.609	35
079	01.07.2010 14:50:06	N50 05.414 E30 02.633	55
080	01.07.2010 14:53:17	N50 05.439 E30 02.613	70
081	01.07.2010 15:00:00	N50 05.460 E30 02.587	55
082	01.07.2010 15:07:31	N50 05.481 E30 02.566	50
083	01.07.2010 15:13:34	N50 05.514 E30 02.540	200
084	01.07.2010 15:33:39	N50 05.494 E30 02.484	70
085	01.07.2010 15:37:33	N50 05.470 E30 02.503	60
086	01.07.2010 15:45:28	N50 05.448 E30 02.526	200
087	01.07.2010 15:50:13	N50 05.425 E30 02.543	50
088	01.07.2010 16:03:44	N50 05.390 E30 02.574	45
091	01.07.2010 16:16:14	N50 05.369 E30 02.526	70
092	01.07.2010 16:22:44	N50 05.399 E30 02.501	90
093	01.07.2010 16:28:15	N50 05.473 E30 02.431	50

It should be noted that microdepressions deeper than 20-30 cm on the testing field were absent. That is only very small elements of nano-relief caused by tillage were observed. Although it can be suggested that some shallow depressions had been eliminated in preparing the field for many years agrochemical and agricultural research.

With a computer program QuantumGIS the results were displayed in the form of contour plan of the carbonate horizon depth in soils (Fig.2), as well as in the form of results interpolation in color according to legend (Fig.3). As such, the results provide a clear view of the heterogeneity of soil cover according to this indicator.

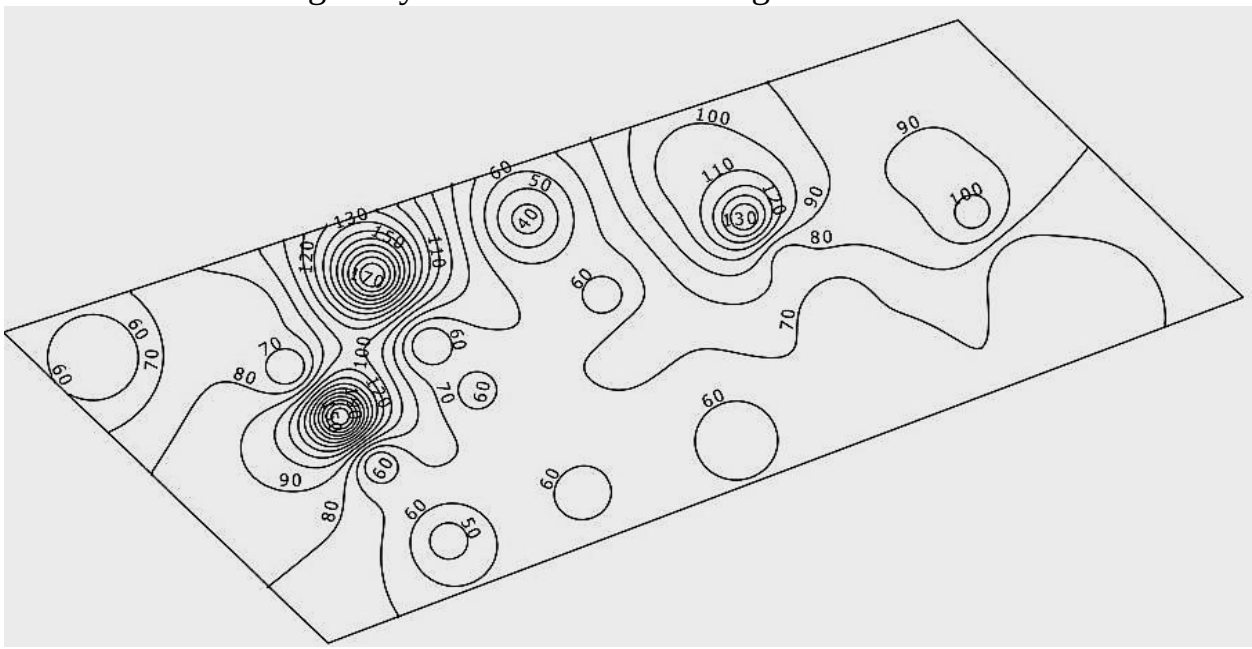

Fig.2. Showing the depth of carbonate horizon (in centimeters) in terms of contour conducted in 10 cm.

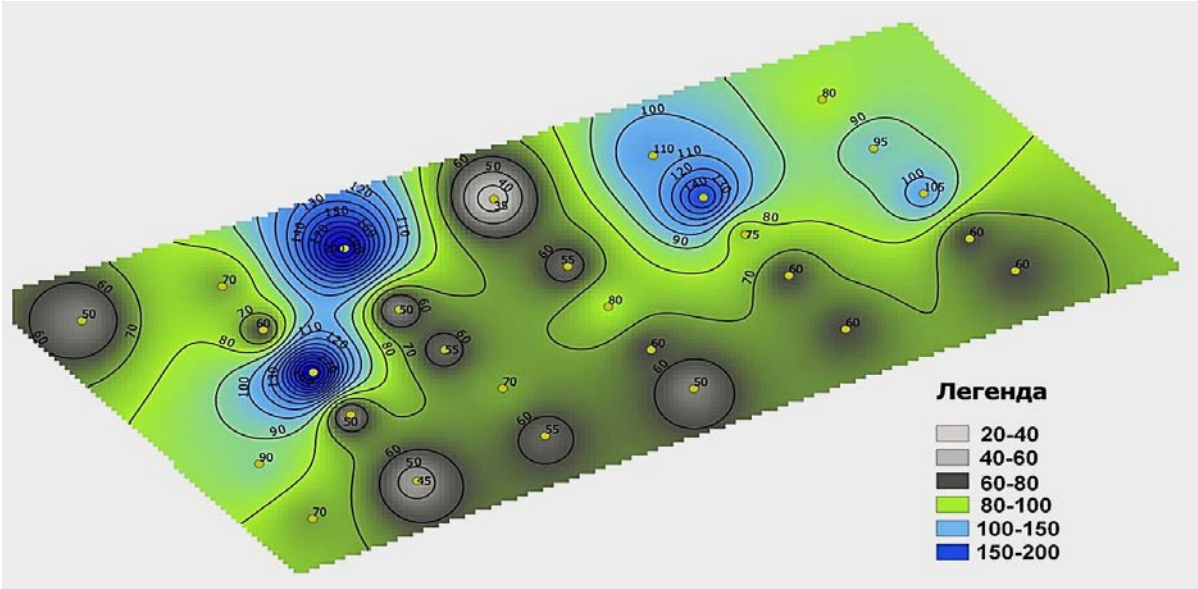

Fig 3. Mapping of research field for the depth of carbonates.

Taking into account the important diagnostic role of carbonates depth in soils of Forest-Steppe zone of Ukraine, we schematically classify the soils of experimental field for this indicator as follows:

1. Chernozem typical with shallow carbonate horizon - (20-40 cm).
2. Chernozem typical (modal or reference) - (40-60 cm).
3. Chernozem typical with deep carbonate horizon - (60-80 cm).
4. Chernozem leached - (80-100 cm).
5. Meadow-chernozem soil - (100-150 cm).
6. Meadow-chernozem soil on noncalcareous loess - (150-200 cm).

Diagnosis of soils with carbonate horizon deeper than 100 cm as meadow-chernozem is made on the basis of our previous studies of microdepressions, but it requires additional justification for the content of moisture, humus and other indicators. It is possible that a profile of soil carbonates is inherited from the previous period, i.e. before the territory leveling for many years field experiments. It is importantly to note, that chernozem typical (modal) is spread at 14% of the total area of the field only (Fig.4). Therefore, the existing soil map does not reflect the real soil cover and requires significant clarification.

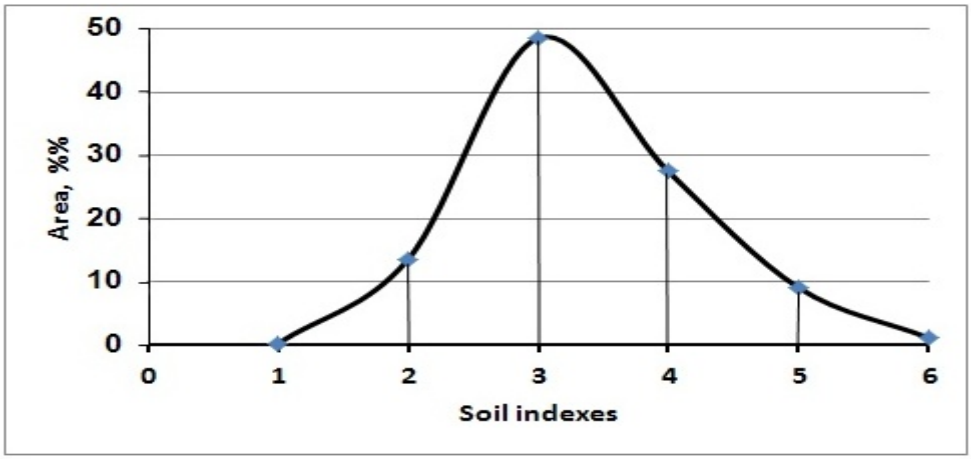

Fig.4. Distribution of soil (as a percentage) at the measured field (soil indices mentioned in the text).

Conclusions and Recommendations: The research results we estimate as the previous ones, ie they require further clarification. But at this stage they clearly indicate the heterogeneity of soil cover of territories with microdepressions in plain part of the Forest-Steppe zone. Therefore there is a need to clarify the existing soil mapping techniques in the preparation of large-scale and detailed maps. Existing regulations of soil profiles placement [3] should be supplemented by additional drilling (by hand drill) chinks to determine the depth of carbonate and to descript a soil lithology. Such chinks (wells) in our study were laid every 50-60 m, but their number at different scales mapping must specify by geostatistics methods. The observed heterogeneity of soil cover requires a review of methods of field experiments inception to improve their reliability. The presence of carbonates in soils also significantly affects the soil reaction (pH) and therefore the solubility and availability of nutrients to plants. So, we need some correction in the fertilization system and in the so-called "precision farming".

References:

1. Азімов О.Т., Бублясь В.М., Бублясь М.В. Геодинамічні процеси та їх відображення у ландшафтах / Сучасні напрямки української геологічної науки. Збірник праць ІГН НАН України. – Київ. – 2006. – С.13-20. (Azimov O.T., Bublyas V.M., Bublyas M.V. Geodynamic processes and their reflection in the landscape / Modern trends of Ukrainian geological science. Proceedings IGS NAS of Ukraine. - Kyiv. - 2006. - P.13-20.)

2. Гедройц К.К. Избранные сочинения. Т. 1-3. Москва: Сельхозгиз, 1955. – 600 с. (Giedroyts K.K. Favourites essay. T. 1-3. Moscow: Selhozhyz, 1955. - 600 p.)

3. Картографія грунтів/За ред. Д.Г.Тихоненко.-Харків: Урожай, 2001. – 321с. (Mapping of soil / Ed. D.H.Tyhonenko.-Kharkov: Urozhay, 2001. – 321p.)

4. Кауричев И.С. Почвоведение. Москва: Агропромиздат. – 1989. – 719 с. (Kaurychev I.S. Soil science. Moscow: Agropromizdat. - 1989. - 719 p.)

5. Полевой определитель почв /Под ред.. Полупана Н.И., Носко Б.С., Кузьмичева В.П. – К.: Урожай, 1981. – 320 с. (Field identification of soil / Ed. Polupan N.I., Nosko B.S., Kuz'micheva V.P. - K .: Urozhay, 1981. - 320 p.)

6. Стародубцев В.М., Ладика М.М. Зміни еколого-меліоративного стану та родючості перезволожених ґрунтів лівобережного Лісостепу (на прикладі басейну річки Трубіж) / Агрохімія і ґрунтознавство. Міжвідомчий тематичний науковий збірник. Кн.2. – Харків. – 2008. – С.295-297. (Starodubtsev V.M., Ladika M.M. Changes in environmental and reclamation state and fertility of waterlogged soils in the Left Bank Forest-Steppe (for example in the Trubizh basin) / Agricultural Chemistry and Soil Science. Inter-thematic scientific collection. Kn.2. - Kharkov. - 2008. - P.295-297.)

7. Стародубцев В.М., Яценко С.В., Павлюк С.Д., Іллєнко В.В. Вплив водного режиму мікрозападин Лісостепу на неоднорідність ґрунтового покриву та його використання / ІІ-й Всеукраїнський з’їзд екологів з міжнародною участю. Збірник наукових статей. – Вінниця: ФОП Данилюк, 2009. – С.176-179. (Starodubtsev V.M., Yatsenko S.V., Pavluk S.D., Illyenko V. Effect of water regime of microdepressions in the forest-steppe zone on soil cover heterogeneity of and its

use / II-Ukrainian Congress of ecologists with international participation. Collected articles. – Vinnitsa: Danyluk, 2009. - P.176-179.)

8. Стародубцев В.М., Розстальний В.Є., Яценко С.В., Бордусь О.О. Водний режим мікрозападин як фактор неоднорідності ґрунтового покриву правобережного Лісостепу // Науковий вісник НУБіП, №149. Серія «Агрономія». - 2010. – с.117-121. (Starodubtsev V.M., Rozstalnyy V.E., Yatsenko S.V. Bordus O.O. Water regime of microdepressions as a factor of soil cover heterogeneity on right bank forest-steppe // Scientific Bulletin NUBiP, №149. Serie "Agriculture". - 2010. - p.117-121)

9. Стародубцев В.М. Ладика М.М., Чернявська Г.К. Підтоплені грунти мікрозападин Лісостепу, їх особливості та агроекологічна роль / IV Всеукраїнський з'їзд екологів з міжнародною участю (Екологія-2013). Збірник наукових статей. Вінниця: ВНТУ. – 2013. - С.420-422. (Starodubtsev V.M., Ladyka M.M., Cherniavska G.K. Water-logged soils of microdepressions in Forest-Steppe zone, their features and agroecological role / IV All-Ukrainian congress of ecologists with international participation (Ecology 2013). Collected articles. Vinnitsa: VNTU. - 2013. - P.420-422).

J11509-008

Nasikovskiy V.A., Yashchu N.O.

DEPENDENCE OF THE AMOUNT OF GLUTEN FLOUR AND STRENGTH DURING STORAGE WHEAT GRAINS

National University of Life and Environmental Sciences of Ukraine
Kyiv, Heroyiv Oborony, 13, 03041

Abstract. The results of studies long-term storage of wheat on the dynamics of technological parameters: content of gluten, flour strength. The dependences between these indicators.

Key words: power flour amount of gluten, grain storage

More than 250 years ago by the Italian scientist Becker opened gluten wheat. Since then (1745), many scholars gradually accumulating body of knowledge of the properties of gluten, its dependence on many factors. Overall, the manufacturer has recommendations regarding wheat farming in some hruntovoklimatychniy area. But again and again appear new varieties of corn that give different from those waiting qualities. Therefore, the production always needs to support science. Only by working together can expect to get the desired result.

With the improvement of material living standards are increasing their needs, including the food. The role of high-quality wheat grains increases. On the other hand, should increase the value of wheat in Ukraine as an agrarian state to solve the world food problem. Conditions for cultivation and spring and winter wheat are favorable. It is important to obtain wheat suitable primarily for use in baking and milling industry. Until recently, Ukraine has not grown wheat in quality strong. Based on the requirements of the applicable standard is strong grain when it meets for Quality 1st class. However, the concept of "power" is the concept of technology, which is determined mainly grain protein complexes.

It is important that the power manifested not only grain quantity and quality of gluten, but high-quality flour, cereals, bread.

Equally important is the study of technological properties of wheat for long storage.

The purpose of research - to monitor the dynamic content of gluten and wheat flour strength during long-term storage

Materials and methods research. For research used grain winter and spring wheat grown in different soil and climatic zones. According to the method of grain stored in different modes: dry and refrigerated. Technological quality of grain were determined from post harvest handling by the end of storage (shelf life: 12 to 24 months or more) determination were carried out by using standardized methods. Grain analyzed immediately after collection, after 1 month of storage, and more - every 3 months.

When Cass research used the following methods:

- GOST 13586.1 - 68 Cereals. Methods for determining Quantity and Quality in Wheat kleykovyпы.

- Strength of flour method and the Green alveohrafi.

Statistical analysis of the results of process control is made by determining the

correlation coefficients between the numbers of gluten and corn flour power output of 70%.

Results. The article interdependence of technological parameters on the results of years of research from storage four botanical varieties of winter and spring wheat.

As already indicated, the term "force" wheat - technology. In no sense - the ability of flour derived from such grains provide a way out for good quality food. In detail, this stands for the ability to "force" - to ensure output of 100 g flour at least 450 ml of porous crumb of bread, bread ratio of height to diameter (hearth bread) is not less than 0.35, excellent taste.

Power of flour from grain was determined by the US Green scientist. The basis of this method (sedimentation) entrusted the ability of proteins grains swell and subside in a solution of acetic acid and lactic.

It is believed flour strong when the volume of sediment over 60 cm3, good quality 50-59 cm3, above average quality 40-49 cm3, average quality 30-40 cm3, weak flour - the amount of sediment less than 30 cm3.

The content of gluten in grains studied varieties ranged from 17 to 25%, quality of gluten grain before storage ranged from 70 to 90 units VDK.

These gluten content in grain and flour strength of the grain that was preserved for 24 months are shown in Table. 1.

As the table on winter wheat Kiev 8, Pearl steppe spring - early 93 there is a direct and strong dependence on the average, by 267 varieties Odessa - weak and Grains other 3 varieties studied positive correlations were found. As the table shows that the strongest correlation found only in terms of grain of winter wheat varieties Kiev 8.

Table 1

The content of gluten strength and long-term storage of grain flour

Moon storage	Kiev 8		Odessa 267		Early 93		Pearl forest-steppe		Early 93 (2)	
	power flour, cm^3	gluten content,%	power flour, cm^3	gluten content,%	power flour, cm^3	gluten content,%	power flour, cm^3	gluten content,%	power flour, cm^3	gluten content,%
1	31.9	23.2	26.7	21.0	20.8	21.7	25.0	18.5	21.5	21.3
3	32.0	22.8	26.9	20.0	21.0	21.8	25.2	18.0	22.0	21.8
6	32.2	22.8	27.0	19.2	21.3	22.0	25.4	19.2	22.3	21.3
9	33.3	22.7	27.4	19.2	21.1	21.8	27.0	19.2	21.5	21.2
12	33.2	21.8	27.3	19.1	21.4	21.1	28.1	19.8	21.1	21.4
15	32.0	21.8	26.8	19.0	21.3	20.0	27.3	19.8	21.1	19.6
18	32.0	21.8	26.6	18.9	21.2	18.8	26.9	19.5	21.0	18.3
21	32.0	20.8	26.5	18.7	20.9	19.0	26.5	19.0	21.0	18.3
24	32.2	20.3	26.0	18.9	19.8	19.2	27.9	18.6	21.4	18.2
	r = 0.87		r = 0.12		r = 0.35		r = 0.61		r = 0.62	

Power of flour depends on the content and quality of proteins, and the enzyme proteinase system. The concept of power flour covers a range of properties:

a) vodopohlynalnu capacity, which depends on the quality of gluten proteins;

b) hazoutrymuyuchu ability, which is caused by some stretchability and elasticity of gluten;

c) formoutrymuyuchu ability, which mainly depends on the strength of gluten.

For display of these properties are necessary: first - proteins that are substrates for proteolytic activity; in - the second, the presence of most enzymes (which is in wheat that is not plagued by adverse factors: heat, spontaneous heating); in - Third, each grain (flour) has activators, which is found to have sulfhydryl groups and some other factors.

Conclusion. During long-term storage of wheat varieties studied found that changes in the number and quality of gluten, flour forces occur in different ways. Some varieties found a strong direct correlation between the content and gluten strength flour others - were found.

References

1. LF Skaletska Biochemical changes in crop production in its storage and processing. /L.F. Skaletska, HI Podpryatov - K .: NUBiP Ukraine, 2010. - 288 p.

2. Skaletska LF dynamics as wheat grown in a northern steppes of Ukraine, during long-term storage. / Skaletska LF, Savchuk NT, VA Nasikovskyy - K. 2006. - 41 p.

3. Wheat. Specifications: GOST 3768-10. K .: Derzhspozhyvach standard Ukraine, 2010.

4. Storage and processing of plant products /[H.I.Podpryatov, LF Skaletska LF AM Senkov, VS Hylevych]. - K .: objective, 2002. - 495s

J11509-009

Mischenko Y.H.

THE INFLUENCE OF AFTER CROP SIDERATE OF OIL RADISH AND CULTIVATION ON THE AGROPHYSICAL PROPERTIES OF THE SOIL

Sumy National Agrarian University,
Sumy, H. Kondratieva 160/5, 40001

Abstract. In this paper we presented the results of the effect after crop green manure and ways of basic soil cultivation on the formation of the agrophysical properties of typical black soil and potato yield in the conditions of the north-eastern Forest-steppe of Ukraine. The use of post-harvest sowing of oil radish on the green manure and conduction of the deep moldboard-free soil cultivation on 28-30cm provides for potatoes growing the most optimal parameters of the soil fertility – the structural state of the soil, the structure coefficient, and the water resistance of the soil aggregates, density of the soil, hardness of the soil and the permeability of the soil. This has led to obtaining the most high yields of tubers – 30,3 t / ha.

Key words: green manure, soil cultivation, potatoes, agrophysical properties.

Introduction. Fertility plays an important role in the providing favourable conditions for the crops growing. In recovery of the fertility significant efforts are directed to improvement of the agrophysical soil conditions. That is why the most important condition of the effective manifestation of soil fertility is proper optimal or contiguous to him level of the basic physical properties of the soil – his structural and physical state and assembling, density and hardness, his water resistance and the permeability of the soil.

Regulation of agrophysical properties is too toilful and remains little explored in many agrophysical characteristics, in particular on their improvement in application of some agrotechnical methods. Based on this in our scientific work has been done the attempt to clear up the direction of the change's processes of the middle-loamy little humus typical black soil agrophysical properties under the influence of after crop green manure and tillage methods.

Input data and methods. Researches were hold from 2005 till 2010 in conditions of the educational research and production complex of Sumy national agrarian university. Field researches were filled according to the active methodological recommendations by the method of split plots. The variants of two-factor field experiment included 2 gradations of after-crop green manure (without green manure and on the background of oil radish green manure) and 4 gradations of soil tillage (plowing 28-30 cm and the moldboard-free cultivation on the depth 28-30, 13-15 and 6-8cm).

Oil radish as green manure was grown in the post-harvest sowing from august till October in 2005-2009 years. Potatoes were grown after oil radish in 2006-2010 years according to recommended technology. In sowings of the test crop in the basis of development phase they conducted definitions of the agrophysical characteristics according to the generally accepted methods.

Results. Discussion and analysis. In our research used green manure in all soil tillage was discovered the significant decrease on 2,7-3,9% contents of the clod

fraction (>10 mm) and on 0,2-0,4% the pulverulent (<0,25mm) fraction, and the significant increase on 0,4-1,9% contents of the agronomical valuable aggregates 0,5-7mm (figure 1).

The replacement of plowing by the moldboard-free cultivation caused to significant decrease on 0,2-0,6% contents of the pulverulent fraction. While moldboard-free cultivation on 13-15cm and 6-8cm the significant increase of the clod fractions was observed, it was higher in several times on the moldboard-free groundwork (1,8-2,1), than while using the oil radish as green manure (0,6-0,9%).

With such distribution of soil particles we have the growth of the agronomical valuable structure's content compared to plowing with the deep moldboard-free cultivation on 0,2-0,9% and while other moldboard-free cultivation –the decrease on 0,1-1,7%.

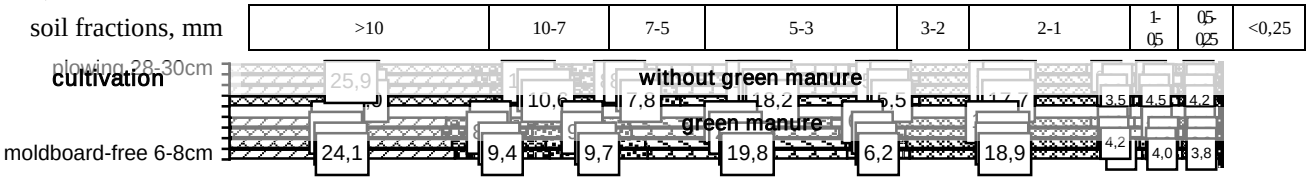

LSD_{05} green manure	0,39	0,19	0,18	0,17	0,14	0,15	0,10	0,14	0,04
LSD_{05} cultivation	0,55	0,26	0,25	0,24	0,20	0,21	0,14	0,20	0,06

Figure 1. The influence of siderate and methods of cultivation on the structurally aggregate state 0-30sm layer of the soil at potato cultivation (2006-2010 years)

Integral indicator of the agronomic evaluation of the soil's structural condition is the coefficient of structure (C_{str}) which varied within 1,84-3,08 according to the received data and had tendency to decrease (figure 2).

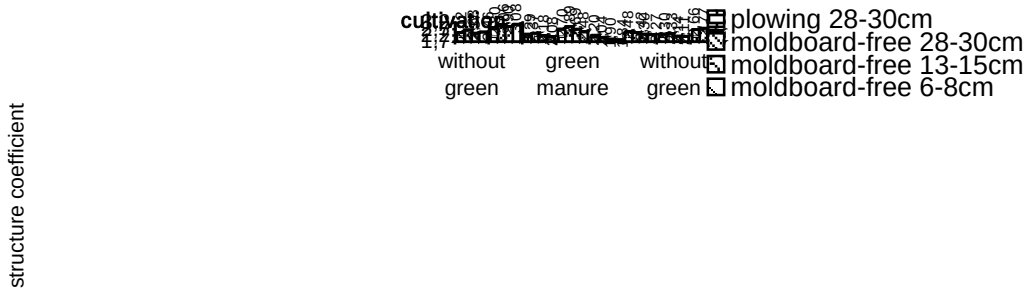

soil horizon, cm	0-10	10-20	20-30	0-30
LSD_{05} green manure	0,09	0,06	0,06	0,06
LSD_{05} cultivation	0,12	0,09	0,08	0,09

Figure 2. The influence of siderate and methods of cultivation on the structure coefficient of the soil at potato cultivation (2006-2010 years)

Applying of the oil radish under the potatoes as green manure provided the increase of the structure coefficient in all soil horizons and comparatively to

moldboard-free background of surplus and was essential and amounted 0,28-0,62 units.

The green manure background made better the action of the moldboard-free cultivations, this was expressed in growth of the structure coefficient compared with plowing. Besides carrying out moldboard-free loosening after oil radish contributed to the formation of the higher structure coefficients (2,9-3,08) in upper 0-10cm horizon than after plowing. However with advantage of the moldboard-free cultivation to plowing leveled according to the cultivation depth and convolution of green manure mass. Deterioration of the structure coefficient in soil horizons 10-20cm and 20-30cm at decreasing of the moldboard-free cultivation depth originated from quickly growth of the clod fraction units in comparison with the pulverulent fraction reducing.

In general the root topsoil (0-30cm) had the best structure when applying the oil radish as green manure and at carrying out the deep moldboard-free loosening and more predominate other ways of cultivation as on the structure coefficient (C_{str} =2,77) as on the contents of water resistance aggregates (44,9%) (figure 3).

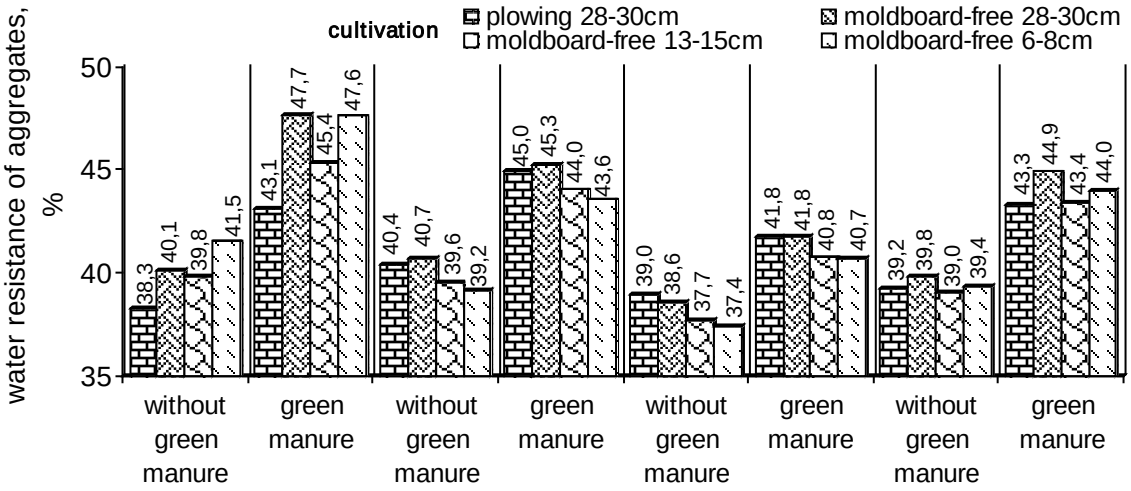

soil horizon, cm	0-10	10-20	20-30	0-30
LSD_{05} green manure	1,08	0,6	0,3	0,5
LSD_{05} cultivation	1,4	0,8	0,4	0,7

Figure 3. The influence of siderate and methods of cultivation on the water resistance of the soil aggregates at potato cultivation, % (2006-2010 years)

Significant improvement of the soil waterproof structure contents on 2,8-6,1% facilitated the application of post- harvest green manure of the oil radish. The application of the oil radish provided significant increasing of the part of wate resistance aggregates on 2,3-4,6% in topsoil 0-10 cm during the moldboard-free cultivation comparatively with plowing. In deeper horizons the variant of plowing had significant advantage to the moldboard-free cultivations except the deep loosening on 28-30cm.

Under the potatoes sowings on the green manure-free background was the lowest contents of the water resistance aggregates in 0-30 topsoil with moldboard-free loosening on the depth 13-15cm (39%), and with the application of the oil radish

as green manure – after plowing (43,3%).

The soil's density we can see as genetically inherited magnitude, which appears in the process of structure formation and depends on as well as from biological and from mechanical process of the soil loosening. That's why the combination of the after crop green manure with the soil cultivation is the effective measure of the soil's density regulation, her importance in the root topsoil 0-30cm was nearly optimal for potatoes (1,10-1,22g/cm^3 [1]) and changed from 1,08-1,15g/cm^3 in topsoil 0-10cm horizon to 1,2-1,27g/cm^3 – in low 0-30cm (figure 4).

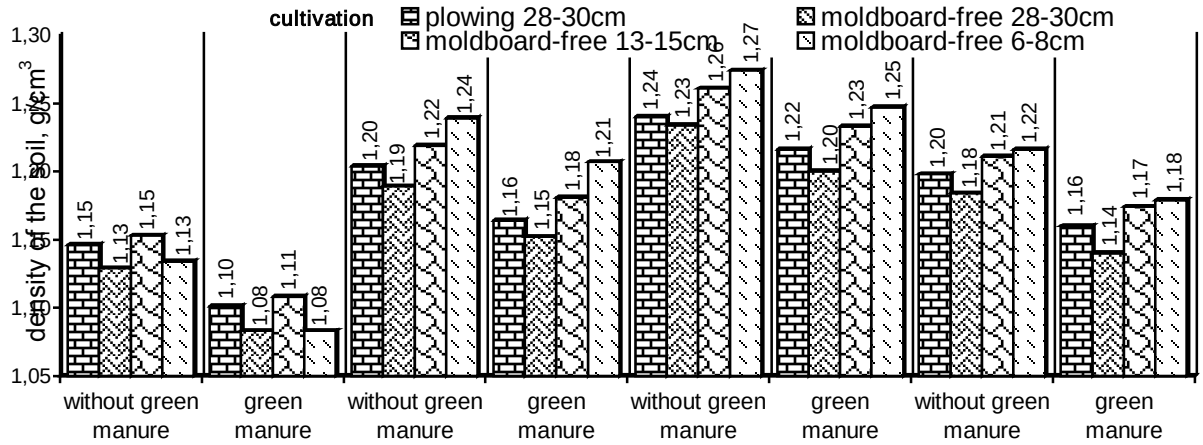

soil horizon, cm	0-10	10-20	20-30	0-30
LSD_{05} green manure	0,009	0,008	0,009	0,008
LSD_{05} cultivation	0,013	0,012	0,013	0,011

Figure 4. The influence of siderate and methods of cultivation on the density of the soil at potato cultivation, g/sm^3 (2006-2010 years)

While the potato cultivation after the oil radish as green manure the density of the soil significant reduced on 0,02-0,05g/cm^{3}compared with the green manure-free background.

Among the moldboard-free cultivations the decrease of the soil's density was in all soil horizons compared with plowing – with a deep cultivation on the depth 28-30cm, and with surface soil cultivation on 6-8cm in 0-10cm soil layer. This is explained by higher concentration of the organic remains in topsoil during such cultivations that is caused by their features of design and soil loosening. The density in 10-20cm and 20-30cm topsoil during the moldboard-free cultivation on 6-8cm and 13-15cm was significant increase compared with plowing which is connected with absence of mechanical loosening.

That's why the application of the after crop green manure of oil radish and carrying out the deep moldboard-free cultivation allows to keep 0-30cm soil layer with the most optimal density for potatoes – 1,08-1,20 g/cm^3.

As the density of the soil its hardness has great importance for the growth and for the development of potatoes and especially for its root system. On average during the period of research the density of the soil with depth was increasing from 4,9-7,9 to 13,0-16,0 kg/cm^2, so the difference between the density of the soil after the oil radish as green manure and without the green manure background was significant in all soil horizons and varied within 1,4-3,3g/cm^2 (figure 5).

The lowest value of the soil horizon hardness was at carrying out the deep

moldboard–free cultivation (5,2-14,7kg/cm^2) and during plowing (6,3-15,8kg/cm^2). It is can be explained by V.V. Medvedev's affirmation, «The deeper soil is cultivated, the less its hardness is and the longer it is preserved in the aftereffect, that is the hardness good "stores" the previous cultivations» [2]. During the depth reducing of the moldboard-free cultivations to13-15cm and 6-8cm was observed the growth of the soil hardness and its magnitude in 0-30cm soil layer significant differ (on 0,4-1,1kg/cm^2) to plowing.

The carrying out of the moldboard-free cultivation on the background of the oil radish green manure provided the significant decrease of the hardness 0-10cm and 20-30cm of soil horizons compared with plowing.

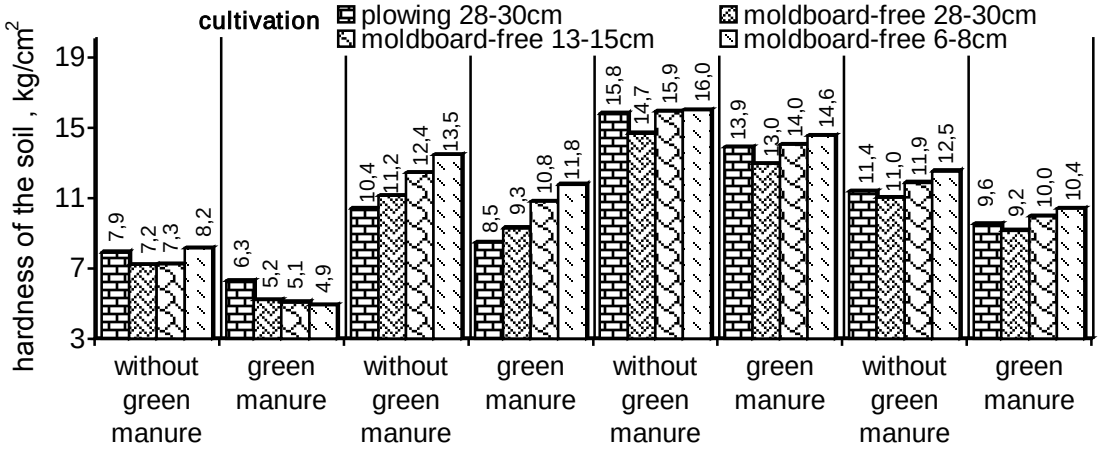

soil horizon, cm	0-10	10-20	20-30	0-30
LSD_{05} green manure	0,4	0,3	0,4	0,2
LSD_{05} cultivation	0,5	0,5	0,5	0,3

Figure 5. The influence of siderate and methods of cultivation on the hardness of the soil at potato cultivation, g/sm^2 (2006-2010 years)

It is explained by higher activity of the biological loosening 0-10cm of soil layer through accumulation in it larger amount of the oil radish green manure mass using the moldboard-free cultivation and the absence in the low 20-30cm soil layer rammed layer of the plow sole which appears during plowing.

The significant advantage of the combination of the green manure background and the moldboard-free cultivation during the cultivation of potatoes was seen also in increase of the soil water permeability, it is facilitates more water absorb that is during the intensive precipitations (figure 6).

Starting of the first 10 minutes and ending of the last minute of accounting the water permeability on the parcels with using deep moldboard-free cultivation for clotting green manure was more higher than other variants. The biggest quantity of the soil water permeability in such variant is explained by deep soil loosening, by better water resistance structure and by absence of the soil peel thanks to the crop remains on the surface.

Despite that after plowing was also the deep soil loosening but in comparison with the deep moldboard-free loosening we have decrease of water permeability which becomes significant from the 50th minute of accounting.

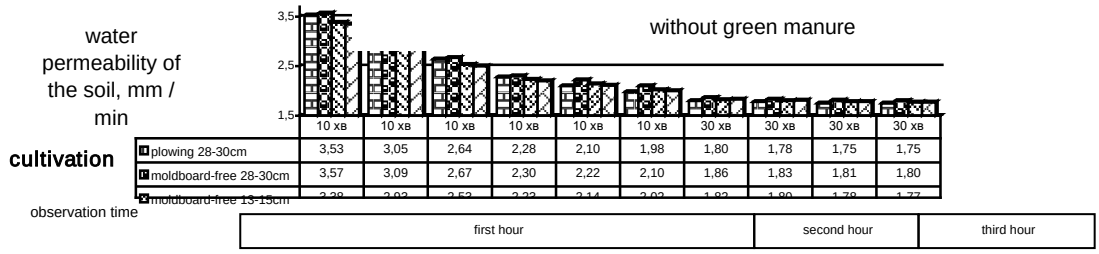

	10 хв	10 хв	10 хв	10 хв	10 хв	10 хв	30 хв	30 хв	30 хв	30 хв
plowing 28-30cm	3,53	3,05	2,64	2,28	2,10	1,98	1,80	1,78	1,75	1,75
moldboard-free 28-30cm	3,57	3,09	2,67	2,30	2,22	2,10	1,86	1,83	1,81	1,80
moldboard-free 13-15cm	3,38	2,93	2,53	2,23	2,14	2,03	1,83	1,80	1,78	1,77

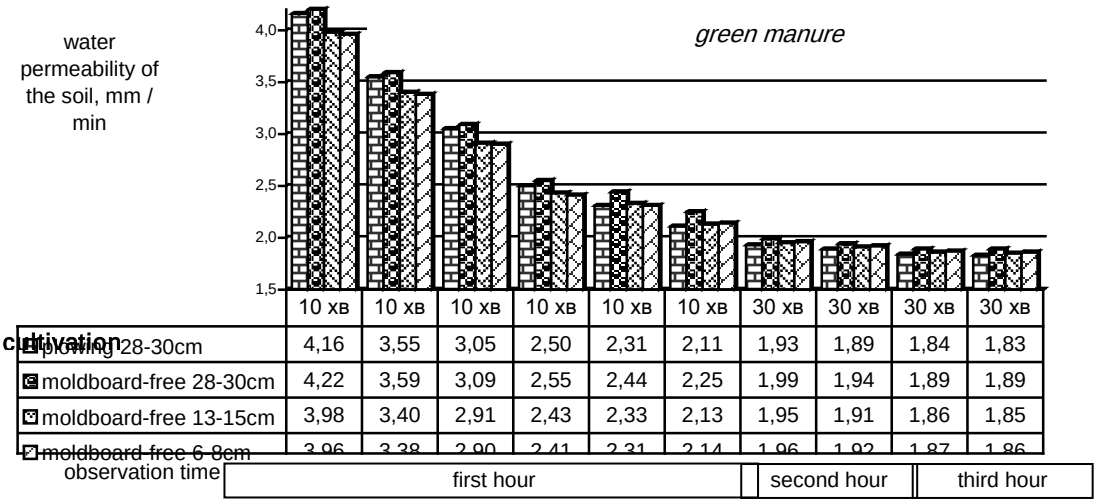

	10 хв	10 хв	10 хв	10 хв	10 хв	10 хв	30 хв	30 хв	30 хв	30 хв
plowing 28-30cm	4,16	3,55	3,05	2,50	2,31	2,11	1,93	1,89	1,84	1,83
moldboard-free 28-30cm	4,22	3,59	3,09	2,55	2,44	2,25	1,99	1,94	1,89	1,89
moldboard-free 13-15cm	3,98	3,40	2,91	2,43	2,33	2,13	1,95	1,91	1,86	1,85
moldboard-free 6-8cm	3,96	3,38	2,90	2,41	2,31	2,14	1,96	1,92	1,87	1,86

LSD_{05} green manure	0,04	0,03	0,02	0,03	0,02	0,03	0,01	0,01	0,01	0,01
LSD_{05} cultivation	0,06	0,05	0,04	0,05	0,03	0,04	0,02	0,02	0,01	0,01

Figure 6. The influence of siderate and methods of cultivation on the water permeability of the soil at potato cultivation, mm/min (2006-2010 years)

The reason of this is as colmatation (mudding) of between the aggregates space by the pulverulent units as well as the presence of the plow sole – rammed layer which slows down the horizontal movement of moisture.

The moldboard-free cultivations on depth 13-15cm and 6-8cm to the 40th minute of the first hour of the water permeability determination, they concede to plowing though in the future they prevail her in intensity of the absorption and the filtration of water by the soil. This advantage of variants of not deep moldboard-free cultivations to plowing is connected with the preservation of the undisturbed vertical orientation of the pore space and by higher water resistance of the soil aggregates.

Thus the carrying out of the deep moldboard-free cultivation on the depth 28-30cm for clotting of the oil radish green manure provides the best conditions for increase of the water permeability of the soil at potatoes cultivation.

During the mathematical treatment of the received data was determined that using the oil radish as green manure had more greater influence on the change of the agrophysical indexes 0-30cm soil layer than its cultivation (table 1.).

Table 1.

The share influence of after crop siderate of oil radish and cultivation of the soil on agrophysical properties 0-30sm layer of the soil, % (2006-2010 years)

Factor of influence	Agrophysical properties				
	structure coefficient	water resistance of aggregates	density of the soil	hardness of the soil	water permeability of the soil
green manure	27,3	74,8	28,9	32,1	80,5
methods of cultivation	4,1	3,1	13,4	9,3	8,1

The formation of the most optimal indexes of the soil's agrophysical properties contributed to obtaining of the highest level of the potatoes yield after growing the oil radish as green manure and carrying out the moldboard-free cultivation on 28-30cm (figure7).

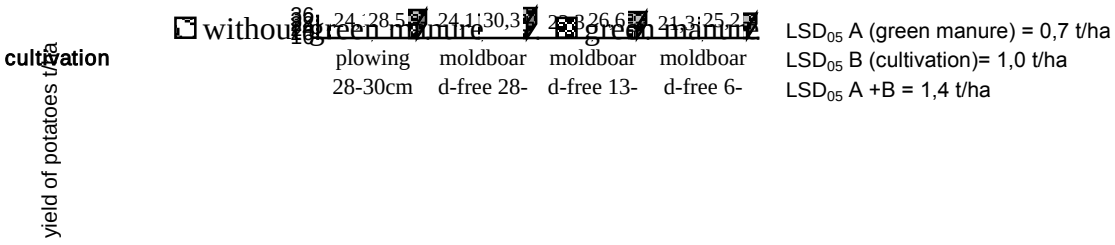

Figure 7. The influence of after crop siderate of oil radish and methods of the soil cultivation on the yield of potatoes, t/ha (2006-2010 years)

The absence of the green manure background led to the significant shortage of the potato's tubers - on 3,9-6,2t/ha, as well as the carrying out of the moldboard-free cultivations on the depth 13-15cm or 6-8cm instead of the deep loosening – on 1,5-5,1t/ha.

Conclusion. Thus for the optimization of the potato cultivation conditions for the purpose of obtaining the highest yields, the most effective is the applying of the after crop sowing of oil radish as green manure and the carrying out of the moldboard-free cultivation on the depth 28-30 cm. Such variant of the combination of the research factors has significant advantage compared with others by content of the pulverulent fraction and the clod fraction and the agronomical valuable fractions, the water resistance aggregates and the coefficient of the structure, the soil density and the soil hardness and its water permeability.

Literature:

1. V.V. Medvedev, T.E. Lyndina, T.N. Laktionova. Soils bulk density (genetic, ecological and agronomical aspects). Kharkiv, 2004, "13th Printing House", pp, 244.

2. V.V.Medvedev. Soil Penetration Resistance. Kharkiv. «13 Press», 2009, pp. 152.

Article has been sent: 13.03.2015 year.

J11509-010

[1]Melnichuk T.N., [2]Andronov E.E., [1]Kameneva I.A., [1]Abdurashytov S.F., [1]Chekalina U.V., [1]Alekseenko N.V., [1]Radchenko L.A., [1]Parchomenko T.Yu., [1]Yakubovskaya A.I., Pashtetskyi V. S., Chaikovskyi V.A.

CHANGES OF MICROBIAL ASSOCIATION OF CHERNOZEM SOUTHERN IN DIFFERENT FARMING SYSTEMS

[1]TheState budget Institution of Republic Crimea «Research Institute for agricultural of Crimea», Simferopol, Kievskaya, 150, 295453

[2]FSBSI«All-Russian Research Institute of Agricultural Microbiology», St-Petersburg, Pushkin 8,Podbelskychausse 3, 196608

Abstract. *Today different farming systems are introduced in agriculture and require a comprehensive analysis. Soil microbes sensitive to the influence of various factors and could be used as indicator of soil condition. As a result of the studies we have evaluated changes in taxonomic composition of microbial communities (at phylum level) in areas of southern chernozem with different farming systems (plowing and no-till) compared to virgin soil. Analysis of microbial communities was conducted by using pyrosequencing of soil metagenome. Have been shown that agricultural systems significantly influence on the changes in soil metagenome of southern chernozem. The application of plowing reduces the number of representatives of the phylum Actinobacteria and increases number of Proteobacteria. No-till technology led to increase of proportion of the phylum Actinobacteria that could be result of plant residues accumulation.*

Key words: microbiome, metagenome, phyla, chernozem southern, farming system, Crimea

Introduction. Environmental and economic reasons led to the need to revise the methodology of modern soil tillage. In this regard, in the Steppes mastered the introduction of minimum tillage, including without tillage (No-till) [1]. This approach not only reduces the mechanical effect on the soil and thereby preserves its structure and fertility.

Microorganisms are played an important role in maintaining of soil fertility and ensuring of nutrients circulation in nature. Microbial cenosis of soil is a complex community of diverse microorganisms interacting on the basis of environmental and trophic relationships, for which inherent ability to stabilizing equilibrium. At the same time, he is sensitive to the action of biotic and abiotic environmental factors.

The use of molecular genetic methods in the microbiology practice enables a more complete investigation of the soil microbiome. The introduction in molecular ecology techniques the next-generation sequencing (NGS) has allowed to increase the number of detected species of microorganisms and reduce the cost of materials and time [2].

The qualitative and quantitative composition of microbial communities and the properties of dominant species could understand the processes that take place in the soil of Crimea at different farming systems, which will determine the optimal conditions for the region.

Review. Agriculture systems based on tillage do not provide optimal conditions

to improve fertility and humidity in rhizosphere. In addition, cause irreparable harm to soil microbiota, increasing soil erosion and degradation [3]. Roots actively colonized with more beneficial microorganisms by using No-till technology that affect at plant physiological processes and soil biological activity. This contributes to increasing the level of photosynthesis products accumulation by plants, the efficiency of water use, the change of microbial communities' composition in rhizosphere towards reducing a pathogenic organism's amount and increasing a nitrifying bacteria number [4, 5].

Plants and microorganisms are dependent from soil humidity (accumulated prior to planting and summer precipitation) under high temperatures conditions with insufficient and unstable moistening. Southern carbonate chernozem is characterized by high levels of biogenic dominated by bacteria (86 - 96%). The share of actinomycetes is 13%, micromycetes - up to 1%. Microbial abundance and diversity in cultivated soils is higher than in virgin lands [6]. Microbiological processes are more intense.

The taxonomic structure study of microbial communities' virgin and fallow soils with different type and regional location are showed that physicochemical factors (pH and humidity) the affect prokaryotes biodiversity to a greater extent than soil type [2]. Agrotechnologies are changing the microbial community structure. The three agro-technical factors (cultivated culture, crop rotation and lime treatment) in sod-podzol soils are influencing to *Rhizobium* and *Arthrobacter*, whereas *Bacillus*, *Pseudomonas* and *Rubrobacter* - resistant to this effect [7].

However, the study and evaluation of changes in the structure of soil microbial communities under the influence of modern farming systems in the Steppe of Crimea is have scientific and practical interest.

In this regard, the aim of our research was to analyze the structure of soil microbial communities sampled from the southern chernozem with using different farming systems (tillage and No-till) as compared to virgin soil.

Input data and methods. The study of changes metagenome was performed on southern chernozem. Sampling conducted in early October before sowing of winter grain. The sites for research were selected from fields are cultivated after chickpea: No-till (is still under 2006), No-till (is still under 2007), tillage to a depth of 22-24 cm, and the virgin.

DNA was extracted from 0.5 g of frozen soil after mechanical disruption using glass beads in the extraction buffer consisting of the following components: 350 µl of solution A (sodium phosphate buffer – 200 mM; guanidine isothiocyanate - 240 mM, pH 7.0), 350 µl solution B (Tris-HCI – 500 mM; SDS – 1% w/v; pH 7.0) and 400 µl of phenol and chloroform (1:1). Destruction of the sample was carried out for 1 min at maximum power on the device FastPrep 24 («MPMedicals», USA). The resulting preparation was centrifuged at maximum speed for 5 min. The aqueous phase was take in new tube and re-extracted with chloroform. DNA was precipitated by adding an equal volume of isopropyl alcohol. After centrifugation, the pellet was washed with 70% ethanol and dissolved in water at 65 ° C for 5-10 min. DNA purification was performed by electrophoresis in 1% agarose gel followed by DNA extraction from the gel by adsorption on silica [8].

The purified preparation of DNA (10-15 ng) was used as template in a PCR reaction (temperature profile: 95 °C - 30 seconds, 50 °C - 30 seconds, 72 °C - 30 seconds, with a total of 30 cycles) with the addition of the Encyclo polymerase ("Evrogen", Russia) and universal primers to the V4 variable region of 16S rRNA gene: F515 (GTGCCAGCMGCCGCGGTAA) and R806 (GGACTACVSGGGTATCTAAT). Furthermore, oligonucleotide primers introduced identifiers for each sample, and the sequences required for pyrosequencing protocol by «Roche» (Switzerland). Sample preparation and sequencing was performed on the GSJunior («Roche» Switzerland) according to manufacturer's recommendations. These procedures were executed for designing an amplicons' library.

Taxonomic analysis of the nucleotide sequences of the amplicons' libraries was performed using QIIME. During the analysis did the following steps: separation libraries identifiers, quality sequencing and filtering of nucleotide sequences, combining sequences into operational taxonomic units (OTE) using a 97 % threshold of similarity, the alignment of the nucleotide sequences by Uclust, construction of the genetic distances matrix and phylogenetic tree for method Fasttree. OTE taxonomic identification was carried out using the RDP data (http: //rdp.cme.msu.edu/)[2]. The cluster analysis of the samples was carried out based on the results of OTE taxonomic identification [9].

Results. Discussion and analysis. During the study of microbial communities of the southern chernozem was found a representatives of 14 phyla, and was ascertained that in soil metagenome are dominated the bacteria (tab. 1).

Table 1.

The share of microorganisms' phyla in the metagenome of southern chernozem samples

Phylum	**Share, %**	**Phylum**	**Share, %**
Proteobacteria	41.5	Other	1.0
Actinobacteria	31.8	*Bacteroidetes*	0.8
*Crenarchaeota**	16.4	*Verrucomicrobia*	0.8
Gemmatimonadetes	2.2	*Planctomycetes*	0.7
Chloroflexi	1.8	*Nitrospirae*	0.1
Acidobacteria	1.7	*Armatimonadetes*	0.0
Firmicutes	1.0	WYO	0.0

* – the domain *Archaea*.

The share of *Archaea* was quite high – 16.4%. All of them presented the phylum *Crenarchaeota*, the class *Thaumarchaeota* and the family *Nitrososphaeraceae*. The microbial diversity is changing depending on the farming system. Thus, representatives of *Archaea* are the smallest share in the virgin soil of 10.8 % (figure 1).

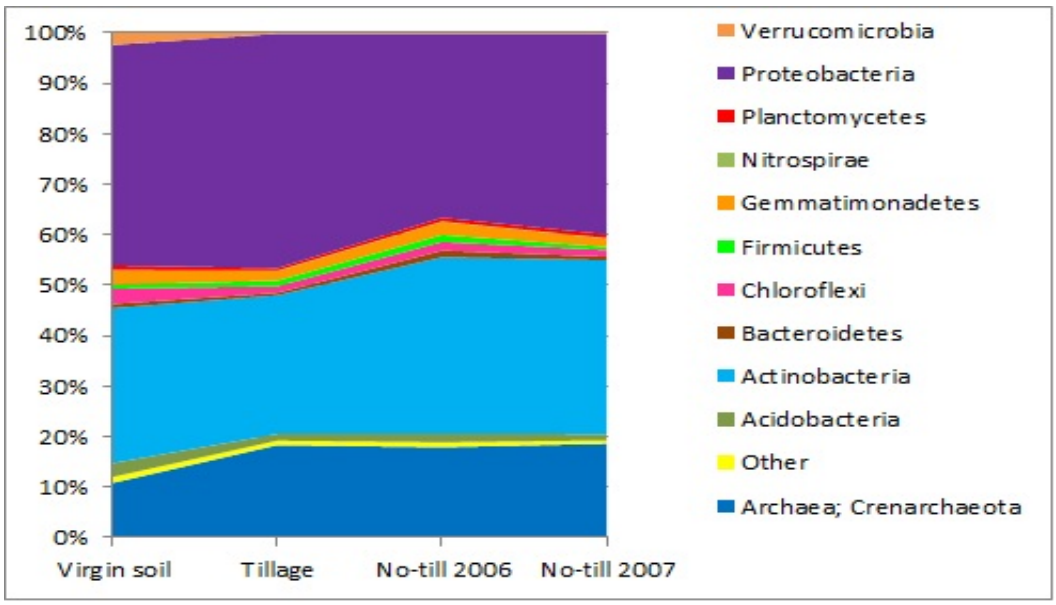

Fig.1. Representation of microorganisms' phyla in soil samples at various farming systems of southern chernozem.

Microorganisms from the phylum *Proteobacteria* are dominated in the soil samples, which accounted for 41.5% in average. Members of this phylum prevailed in the tillage (46.3%) and virgin samples (43.5%). Their share at No-till was within 36.4-39.7 %.

Among the dominant phyla *Actinobacteria* representatives constituted 31.8%. It is known, that actinobacteria play an important role in the decomposition of organic substances, and also have a high resistance to a low moisture content of the habitat, which may explain the high number of them [10]. Test sites of southern chernozem are in arid Steppe zone of Crimea, where a repeatability of months with drought (GTK≤0.5) is 60-70% [11]. The lowest content of actinobacteria representatives observed (27.4%) at the sites with using plowing, which may be caused by the presence of plant residues less than the no-till technology.

Representatives of the phylum *Acidobacteria*, also involved in the decomposition of plant residues, are few in southern chernozems, as are acidophiles and more common in the podzol soils [2]. The average share of them in the southern chernozem was 1.7%. Among the samples with a maximum number of 2.7% was virgin. The presence in some representatives of *Acidobacteria* a large number of exopolysaccharides coating protects the cells of microorganisms and determines their adaptive capacity in the population of different ecological niches.

On virgin dominant number of microorganisms found among the phylum *Gemmatimonadetes* (2.8%), also phylum *Chloroflexi* (3.0%), with an average of 2.2% and 1.8% accordingly. The share of the phylum *Firmicutes* in general metagenome was 1%. Among samples mark the area of the southern chernozem, where no-till technology being developed since 2006, the number of representatives of *Firmicutes* was 1.4%.

The number representatives of phyla *Verrucomicrobia* and *Planctomycetes* were respectively 0.8% and 0.7%. In this case, the highest proportion was found in their virgin 2.4% and 0.9%. The representatives of phyla *Armatimonadetes* and WYO

found only in some soil samples, while their share does not exceed 0.1%. In the soil samples was observed proportion (1%) non-attribute sequences at the level of phylum, due to the incompleteness of the database [2].

Cluster analysis on the structure of microbial communities at phylum of the southern chernozem samples with different systems of cultivation showed only average similarity (0.6) between the no-till technologies with different years of their introduction (fig. 2). Tillage is remote from the first group, and virgin has a minimum similarity (0.1). The analysis allows to note that the farming system determines the similarity of the southern black soil microbial diversity.

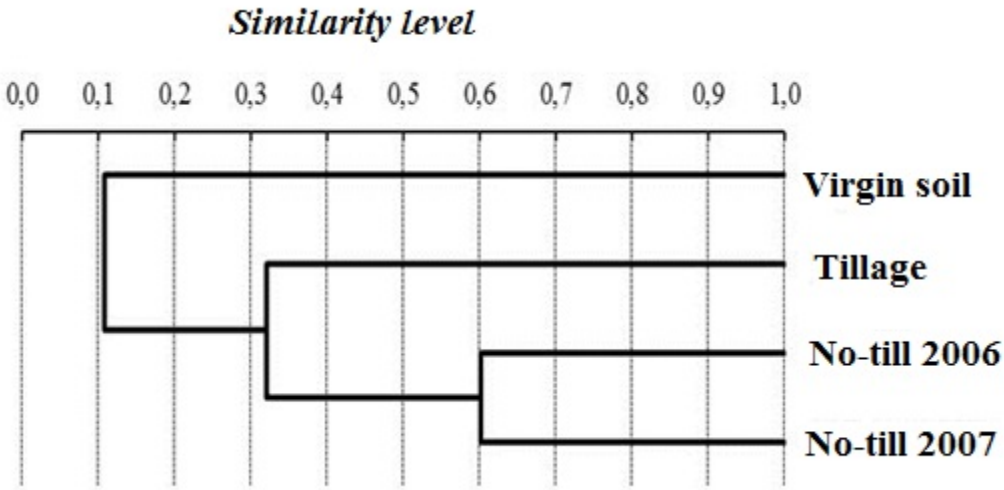

Fig. 2. The dendrogram of similarity of microbiome (at the level of diversity phyla) of southern chernozem samples under different farming systems.

Summary and Conclusions.

As a result of studies have been evaluated the changes of soil microbiome in samples of southern chernozem with different farming systems (tillage and No-till) in comparison with virgin soil. Analysis of microbial communities was conducted by pyrosequencing of soil metagenome.

It was found that the system of agriculture significantly influence on the changes in the soil metagenome of southern chernozem. The application of tillage reduces the number of representatives of the phylum *Actinobacteria* and increases – of *Proteobacteria*. No-till technology promotes to increase of the part of the phylum *Actinobacteria*, which may be conditioned by the accumulation of plant residues.

It is shown that the diversity of microorganisms' phyla in microbiome of virgin and cultivated soils not similar to each other (level of similarity (0.1). Tillage and No-till systems have a weak similarity (similarity level 0.3). No-till systems have a level of similarity 0.6.

This work was supported by the RFBR grant № 14-44-01624.

References.

1. Adamen F.F. Agro-ecological characteristics of the agricultural production in the Crimea / F.F. Adamen, V.S. Pashtetskyi, A.V. Sidorenko. - Klepinino - 2011. - 104 p.

2. Chirak E.L., Pershin E.V., Dolnik A.S., Kutovaya O.V. et al. Taxonomic structure of microbial communities in soils of different types according to the high-throughput sequencing libraries 16S-rRNA gene // Agricultural Biology, 2013, № 3, pp. 100-109.

3. Bioregulation of the microbe-plant systems / [G.A. Iutinskaya, S.P. Ponomarenko, E.I. Andreyuk et al.]. - K .: Nichlava, 2010. - 464 p.

4. Kosolap M.P. Farming systems NO-till / M.P. Kosolap, A.P. Krotinov. - K: Lotus, 2011. - 350 p.

5. Impact of No-Tillage and Conventional Tillage Systems on Soil Microbial Communities /Reji P. Mathew, Yucheng Feng, Leonard Githinji, Ramble Ankumah, Kipling S. Balkcom // Applied and Environmental Soil Science Volume 2012 (2012), Article ID 548620, 10 p.

6. Churkina G.N. The biological activity of the carbonate southern chernozem in depending on agrotechnical methods of cultivation of agricultural crops: dis. cand. biol. science / G.N. Churkina - Almaty, 2007. - pp. 28-29. 103.

7. Dumova V.A. Pershin E.V., Merzliakov Y.V., Kruglov U.V., Andronov E.E. Major trends in the formation of soil microbial community in a stationary field experiment according to high-throughput sequencing libraries 16S-rRNA gene // Agricultural Biology, 2013, № 5, pp 85-92.

8. Andronov E.E. Isolation of DNA from soil samples / E.E. Andronov, A. G. Pinaev, E.V. Pershina. - Saint - Petersburg: PC "Combining Venta", 2011. - 27 p.

9. Guidelines on the use of graph-analysis of studies of systems consisting of biotic and abiotic components / [N.I. Vorobyov, O.V. Sviridova, R.S. Kutuzova]; ARRIAM RAAS - St. Petersburg - Pushkin, 2006. - 59 p.

10. Ventura M., Canchaya C., Tauch A., et al. Genomics of Actinobacteria: tracing the evolutionary history of an ancient phylum. // Microbiol. Mol. Biol. Rev., 2007. – 71 (3): 495–548.

11. Semenova I.G. Assessment of drought conditions in the Ukraine at the end of the XX - XXI century // Herald Baltic Federal University. Kant. - №1, 2014, pp. 20-29.

J11509-011

Zaporozchenko V.Y.

THE METHOD OF CALCULATION OF WATER-SAVING IRRIGATION REGIME ALFALFA IN FOREST STEPPE OF UKRAINE

Dnepropetrovsk State Agricultural Economics University
Dnepropetrovsk, Str. Voroshylova , 25, 49600

Abstract. The development of a method for calculating soil moisture regimes under alfalfa in Forest Steppe of Ukraine is the purpose of research. The agrohidrometeorological method is the basis for calculation. It is based on the use of daily moisture reserves in the different soil layers. As a result of the analysis the is found that for normal growth and development of alfalfa even in the critical periods is necessary significantly less water in comparison with the methods used in the practice of irrigation agriculture. That is why there is no need for use of inflated irrigation norms that lead to an increase in the cost of cultivation of this crop and may contribute to processes of flooding, secondary salinization and others negative phenomenon.

Keywords: alfalfa, moistening, the method of water-saving irrigation, the replenishment of soil moisture.

Introduction. Sustainable irrigation development in Ukraine as an important component of food and resource provision, it requires the efficient use of water resources and, at the same time, ensuring environmentally balanced development of reclaimed areas.

The main conditions for the effectiveness of irrigation is a rationality of the use of water resources. One way of solving this problem is the use of water-saving irrigation regimes.

On the strength of the environmental, economic and social conditions is one of the main objectives in the process of growing alfalfa is the most effective use of each cubic meter of irrigation water. Alfalfa - is the cheapest and most reliable way to protect agro-technical soil from wind and water erosion. In addition, it crops can be widely used as an effective means of secondary salinization of irrigated land. However, due to excessive irrigation widely applicable rates, the irrigation of alfalfa is often accompanied by negative processes, such as the rise of the groundwater level, salinization, reduction of the soil fertility, water erosion. Therefore, further development of agricultural production is closely related to the rational use of irrigation water. Thereby, an elaboration of calculation method of water-saving irrigation regimes of alfalfa in the steppe zone of Ukraine is relevant now.

It is appropriate to apply the methods of calculation of irrigation regimes, that take into consideration the natural humidification of the soil for a particular year and aimed at preserving of water resources. This methods are intended for the purpose of irrigation in specific years, along with the methods, which were developed in the irrigation and drainage practices. Should be applied such irrigation rates, which would provide the humidification of the most active topsoil in terms of soil moisture exchange. This will prevent the gravitational losses of irrigation water beyond the topsoil andas much as possible consider the physical properties of the soil and

groundwater levels.

Literature review. Different crops need different quantity of the soil moisture at different periods of their development. Thus, in the cereals and alfalfa requirements for optimum soil moisture differ only slightly, though alfalfa consumes at least 1,5-2,0 times more water than cereals [2]. Especially urgent in the context of irrigated agriculture is the need for information about moisture reserves in the soil where there is an opportunity to actively react to humidity changes of root layer of soil. There are at least two aspects of using information about soil moisture reserves at the planning and maintenance of irrigation systems. The first is the calculation of irrigation rate, which reflects the ratio of many hydrometeorological parameters. Second, is the operational management of irrigation regime, in purposing to maintain soil moisture at the optimal level considering the weather conditions and the needs of agricultural crops in moisture at different phases of growth. Abidance of all aspects should ensure a good condition of the soil, high, sustained and qualitative yields of agricultural crops.

Input data and methods. In case of choosing a method of calculation of water, obviously, should keep in mind the volume and availability of meteorological observations which are required for implementation of chosen method possibility of calculating moisture reserves on individual fields and their arrays. The most appropriate method for calculating soil moisture reserves, obviously, should be considered as those which are based on significative of the previous weather conditions and moisture indices, which can be easily calculated by standard meteorological information, for greater precision and simplicity of determining of the soil moisture reserves [3].

During the economic crisis, unforeseen environmental conditions and shortage of resources is necessary to develop alfalfa's irrigation regimes, which based on new methodological principles, focused on high yield and soil conservation with minimal water consumption.

Definition of terms of irrigation, which is generally carried out for 75% and 95% years of moisture availability at medium-dry and dry years is the most crucial moment in the organization of irrigation of alfalfa. There is a considerable variability of weather conditions. During the irrigation season which result to a large difference in soil moisture reserves and consumption by the plants. This creates a need to implement the constant adjustment of irrigation culture’s regime, depending on weather conditions. This is the implementation of irrigation regime of culture. There are use different methods for calculating irrigation regimes in practice of irrigated agriculture. They are complex, expensive and consume so much time to obtain desired results. Should be noted that the use of the imperfect method provides a more exact definition the terms of irrigation, rather than indiscriminate irrigation based on subjective decisions [4].

That is why we used the technique for the calculation of alfalfa irrigation regime developed by prof. Litovchenko A.F. [5]. The formation of soil moisture reserves mainly influenced by precipitation, temperature and humidity deficit. It was found by the detailed analysis of the correlation of the measured moisture reserves in the fields under various crops on 84 hydrometeorological stations in the Forest Steppe zone of

Ukraine, and also by the meteorological information. Action of the latter factors has a significant effect 2-3 months before the date of determination of moisture reserves [6].

The technique is based on the resource's consideration of soil moisture in a meter and a half-meter soil layers which has been described in [5].

Agrohydrometeorological (AHM) method was designed by prof. Litovchenko A.F. It contains the calculation of water-saving irrigation regimes based on the use of daily values of soil moisture on the fields of the main crops. Importantly that the results of calculations of irrigation regimes depend not only on the method and the accuracy of the calculations, but also on the correctness of its application, the representativeness and accuracy of baseline data.

AHM method is a graphical-analytical method for calculating irrigation regimes. It based on determining on the schedule (fragmented hydrograph) daily values of moisture reserves in the various layers of the soil settlement. Analysis of such a comprehensive chronological schedule allows to assigning the limits of optimal soil moisture based on soil properties, kinds of plants and phases of their development, as well as weather conditions.

In this case, the lower limit of the optimum soil moisture is assigned according to the literature taking into account the soil properties, kinds of plants and phases of their development, as well as weather conditions and of mowing.

The shortages of the soil moisture reserves can be determined by the hydrograph's soil moisture reserves resources considering their phenological phases.

AHM method has been developed for major crops such as winter wheat, corn and spring barley, but the author used this technique for planting of alfalfa. Its need some information about measured moisture reserves under its crops for applying this method to the alfalfa. The peculiarity of these instrumental measurements sown with alfalfa is that their statistical series are limited and almost at every hydrometeorologicalstation (HMS) its are insufficient.

The information on the measured values of the ten-day moisture reserves under sowing of alfalfa in the Forest Steppe zone of Ukraine, provides in agrometeorological yearbooks [7]. Series of instrumental observations (measurements) are insufficient on some of them like a 1-2 years. That's why, it is important to increase the amount of information. It means to result a short series of observations into a prolonged period [8].

It is necessary to build schedules of the investigated data (in our case, the moisture reserves) in the application of statistical methods for data analysis and processing a long period of observation. The preliminary analysis is clearly identify the degree of linear or curvilinear relation between the analyzed events. It also allows to establish a value that sharply and unreasonably deviate from the general pattern of the statistical relationship.

In our case, had been used the correlation dependence method of two variables: the moisture reserves under the sown with alfalfa from moisture reserves for winter wheat, to extend the statistical series, because winter wheat has a sufficient amount and period of observation.

Correlation of two variables determine two methods: as a graphical correlation

technique and analytical method of least squares. Linear relationship between two variables X and Y is better expressed by a straight line passing through the point corresponding to the average value of these variables. By defining a single point on a line can determine the angle of inclination. At the points plotting and determining the average of the coordinates of points separated by intervals of two or more values of the independent variable X. If all the plotted points are divided into two approximately equal groups, the line was built at the average coordinates (centers of gravity points flow) of each group, not only to determine the factor of dependence, but also passes through the point of average value. Straight line built on the centers of gravity, usually has a slightly larger inclination than the straight line determined by the method of least squares, and when they coincide absolute correlation. With the increasing closeness of correlation deviation between these two lines is decreases and at the absolute correlation they are identical. Dependence built on the centers of gravity with some approximation gives a minimum deviation of the sum of the absolute values, where as the dependence obtained by the method of least squares leads to a minimum sum of squared deviations. Centers of gravity point groups usually find graphically - by successive averaging. At first find the center of the graph between the two points, then - the segments joining the average values of these two points divide in half, getting an average for four points, etc. Points are always grouped according to the dependent variable. If the points are grouped relatively the dependent variable, we obtain a little bit different line, and the differences between the two variants of construction increases with decreasing correlation closeness. If the considering the centers of gravity of groups (two, three, etc.), it is determined that averaging gives a curved line, it may be carried on a mid-point of the curve does not necessarily have to pass through the centers of gravity points. In this case, to determine graphical correlationis applied least squares method as the most reliable.

Thus, according to the obtained data which have been plotted the schedule of the moisture reserves in the first meter of soil under the sown with alfalfa and winter wheat (pic. 1).

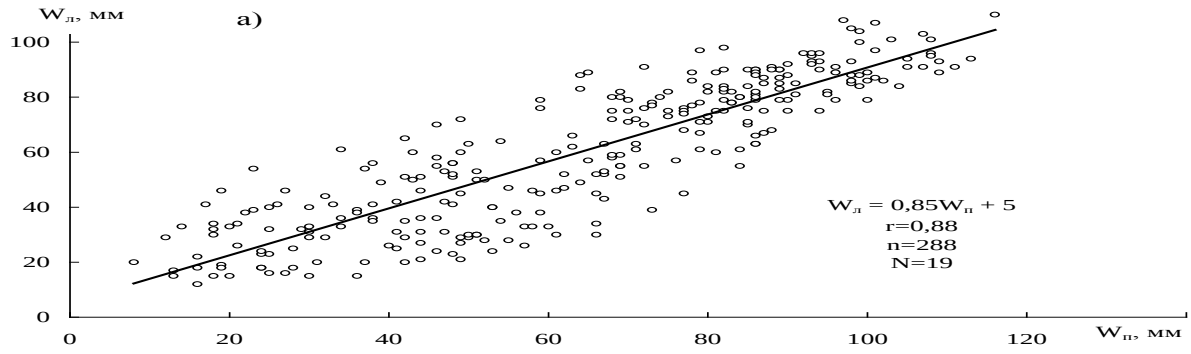

Pic. 1. Correlation dependence of the moisture reserves under the sown with alfalfa and winter wheat according to HMS Belopol'e (Sumy region) in the half-meter (a) soil layer.

where$W_л$ i $W_п$ - moisture reserves, respectively, under alfalfa and winter wheat.

The abscissas correspond to the values the moisture reserves under the sown of winter wheat ($W_п$), and the ordinates - under the sown with alfalfa ($W_л$) for a series of

joint (parallel, simultaneous) measurements with an error of one day assuming that moisture reserves for this day will not change significantly. So, received a set of data, evenly spaced along a straight line, we can establish a connection between the investigated (experimental) values of moisture reserves.

Applying a correction factor which is determined by the formula [9] occurs in case of impossibility of applying the method of correlation due to insufficient duration of the experimental data series.

Correlation coefficient is used to estimate the closeness of the connection between the investigated values, and it can be approximated by the following equation [8]

$$r = \frac{\sum_{1}^{n}(W_л - \overline{W_л})(W_n - \overline{W_n})}{\sqrt{\sum_{1}^{n}(W_л - \overline{W_л})^2 \cdot \sum_{1}^{n}(W_n - \overline{W_n})^2}} . \quad (5)$$

The coefficient of correlation, which is in the range 0,75-0,93 (for the least squares method) and 0,75-0,98 (the transition coefficient), and average of in researched area is 0,83. Communications, which are ensure a deviation less than 25% (close enough), and we have taken as a settlement.

Results. So resource's communication of soil moisture in a half-meter and meter soil layers can be considered reliable. This allows (with sufficient accuracy for practical) to determine the moisture reserves under the sown with of alfalfa during all vegetation period.

Lower limit value of optimal soil moisture is assigned based on the soil properties, kinds of plants and phases of their developmentas well as the weather and mowing conditions of [1, 2]. It can be assigned in the calculations of irrigation regime on agrogidrometeorological method for the construction of a fragmentary hydrograph (pic. 2) the moisture reserves in a predetermined (meter) layer of soil under the sown with researched culture.

Hydrography soil the moisture reserves can be determined considering their lack of the soil moisture reserve's phenological phases of crop's development. Having the actual moisture reserves should be determined the shortage of resources’s moisture in determined layer of soil, which would correspond to irrigation norm. To perform this: at the point of intersection of the hydrograph of available moisture reserves with a lower limit of soil moisture should be appointed watering (up to one day). Calculating alfalfa irrigation regime by graphoanalitical method (AGM) is carried out by differentiated irrigation rates, in the quantity of 30-50 mm.

Summary and Conclusions. From the analysis of the data follows that the averaged value of irrigation norms varies in mid-dry year: alfalfa crops of the first year vegetation from 100 mm to 150 mm, second and further years, from 30 mm to 180 mm, the seed - from 0 to 150 mm; and dry year: the alfalfa crops of the first year vegetation from 190 mm to 280 mm, second and further years from 70 mm to 300 mm, seed - from 0 to 140 mm.

These irrigation norms are much lower than the recommended water-saving standards [10].

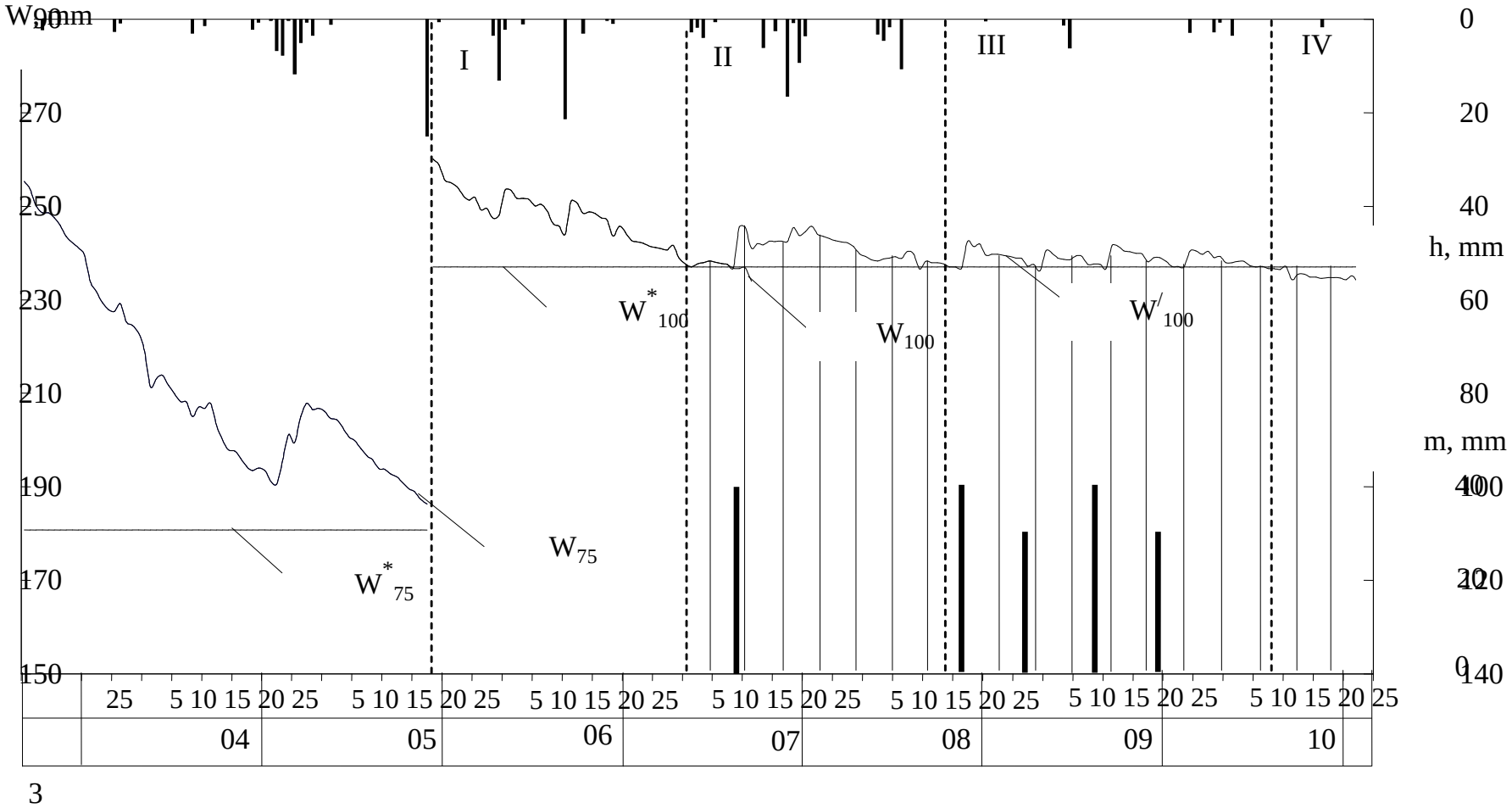

3

Pic.2 Fragmented hydrograph of soil moisture and the moisture regime of alfalfa crops by AGM method (HMS Belopol'e (Symmy), 1983, P=75%). n=5. m=30(2) – 40(3). M=180 mm. W - natural moisture reserves; W ′ - moisture reserves considering irrigation; W* - optimal moistening, mm.

The proposed method of calculating water-saving of irrigation regimes alfalfa crops can be useful as well in planning of irrigation regimes, as in several other agricultural activities designed to improve moisture crops and increase their productivity (fertilization, inter-row tillage, etc.).

Literature:

1. Ivanov A.I. Alfalfa / AI Ivanov. - M .: Kolos, 1980. - 350 p.

2. Zharinov V.I. Alfalfa / V.I. Zharinov, V.S. Clui. - 2nd ed., Rev. and add. - K.: Urozhai, 1990. - 320 p.

3. Zaporozhchenko V.U. Assessment of the agrohidrometeorolofical calculation method of alfalfa irrigation regimes in the steppe and forest-steppe zones of Ukraine // Theses of the International Scientific Conference "Current status and problems of agricultural melioration." - Dnepropetrovsk, 2010.

4. Recommendations on scientifically-based cultivation of alfalfa to provender and seed / O.I. Hyellyer. - Kiev, 2004. – 44p

5. Litovchenko A.F. Clarification of moistening crops of alfalfa in the steppe zone of Ukraine / A.F.Litovchenko, V.U.Zaporozhchenko // Agrohidrometeorological method for calculating soil moisture and water-saving regimes of moistening irrigated crops in the steppe and forest steppe of Ukraine: Monograph. - Dnepropetrovsk: Publishing house "Svidler A.L.", 2011. - 244 p.

6. Litovchenko A.F. Resources of soil moisture in Dnepropetrovsk region / A.F.Litovchenko. - Dnepropetrovsk, 2001. - 234 p.

7. Agrometeorological annuals on the territory of the Ukrainian SSR for 1966-1987. - Obninsk: VNIIGMI - MCD.

8. Rozhdestvenskii A.V. Statistical methods in hydrology / A.V.Rozhdestvenskii, A.I.Chebotarev. - L .: Gidrometeoizdat, 1974. - 424 p.

9. Luchsheva A.A. Practical hydrometrics / A.A. Luchsheva - L .: Gidrometeoizdat, 1983. - 423 p.

10. Meliorative systems and structures. DBN V.2.4-1-99. - K .: Derzhbyd of Ukraine, 2000. - 180 p.

Supervisor: full prof., doctor of geografical SCI -Litovchenko A.F. .;

Postulant of agrarian sc, Assoc. Tkachuk A.V.

Article sent: 10/03/2015, the

J11509-012

Morozov O. V. – Doctor of Agricultural Sciences, Professor,
Dudchenko K. V. – Postgraduate, Kherson State Agricultural University,
Kornberger V. H. – Candidate of Agricultural Sciences, Rice Institute of National Academy of Agrarian Sciences

EFFICIENCY OF USING DRAINAGE AND DISCHARGE WATERS OF RICE IRRIGATION SYSTEMS

Abstract.

Morozov V.V., Dudchenko K.V., Kornberger V.H. – Efficiently of using drainage and discharge waters of rice irrigation system.

The technology of using drainage and discharge waters of rice irrigation systems for irrigating rice and related crops has been worked out on the basis of the investigation results. The regulation of drainage and discharge flow interrelated with groundwater reduces rice irrigation norm by 1000–1300 m^3/ha, discharge volumes beyond the system – to 400 m^3/ha and increases rice yields by 8,6 centners/ha on average.

Keywords: *rice, rice irrigation system, drainage and discharge water, yield.*

Introduction. Rice-growing is a highly productive branch of agriculture with a high level of economic efficiency. The actual problem of growing rice in the South of Ukraine lies in the fact that the technological process requires considerable amounts of irrigation water. When rice is grown under conditions of Krasnoznamyanka irrigation system the irrigation norm reaches 20–25 thousand m^3/ha. Substantial water supply entails considerable amounts of non-productive technological discharges, which may exceed 50% of water supply in rice growing systems (RGS). The water is discharged into the Black Sea aquatorium which worsens the ecological situation in the rice-planting region and recreation zone. Thus the problems of re-using drainage and discharge waters, minimizing non-productive discharges, saving resources and protecting nature are the actual ones.

Literature review. The problem of reducing the negative impact of rice-growing on the environment appeared at the end of the 20th century. One of the ways of solving it is reusing drainage and discharge wares for irrigating rice and related crops. This problem was investigated by many scientists: D. H. Shaposhnykov, I. K. Supriaha, A. A. Vantsovsky, V. Y. Makovsky, V. H. Kornberger, V. V. Morozov, L. M. Hranovska, I. P. Lypynets and others.

The example of this problem solving is a closed check irrigation system (CCIS-M), worked out by the candidate of technical sciences V. Y. Makovsky. It completely eliminates the disadvantages of the traditional rice irrigation systems of the Krasnodarsk type. The main disadvantage of this system is its high price.

Results. Discussion and analysis. The research was conducted using traditional methods in the RGS of the Rice Institute of the National Academy of Agrarian Sciences during 2009–2014. The soils of the experimental plots are chestnut alkali of medium loamy content. The major method of investigation was a field poly-factor experiment in working conditions of the Rice Institute of the National Academy of

Agrarian Sciences which are typical for the RGS of Krasnoznamyanka irrigation system. Laboratory, model and analytical researches were used (B. A. Dospiekhov, S. D. Lysohorov, V. O. Ushkarenko, A. Y. Skrypnikov, V. V. Medvediev, H. V. Novikova, S. A. Baliuk, Y. V. Arinushkina, N. I. Bazylevych, Y. I. Pankova, O. A. Alekyn, V. V. Morozov and others).

In the process of research we tested the resource-saving technology of using drainage and discharge waters of rice irrigation systems, which had been developed on the basis “Technologies of growing rice meeting the requirements of the environmental protection” [1].

Rice fields are flooded immediately after sowing, the water layer being not higher than 8–10 cm. The water is gradually absorbed by the soil and evaporates. The moisture absorbed by the soil is used for saturation, deep and side filtration which gets into drainage and discharge canals.

After seedlings appear the checks are gradually filled with water, one third of the plant being over the surface of the water. During the tillering stage the water layer ranges from 5 to 7 cm. After tillering the depth of the water in the check is gradually increased to 10–12 cm and kept at this level until the stage of wax ripeness. During this period the level of ground water rises to 1m.

In order to reduce filtration losses of water from the checks it is necessary to increase the water level in the drainage and discharge network, the vertical levels in the checks and drainage and discharge canals being minimized, in some cases the water level in the drainage and discharge network exceeding this parameter in the checks. Te water level in the drainage and discharge network is regulated with automated regulators of the drainage flow patented by the authors (Pat. 87665 Ukraine, MPK A01B 79/00. The device for regulating the level of drainage and discharge waters) [2]. The given hydro-technical installation consists of a slide (1) (**Figure 1,2**), connected with a screw (3), lifting and lowering the shutter (7), made of sheet steel (4 mm thick) and regulating the height of a rectangular water discharge tunnel (2). The construction moves along the support-chassis (4), made of rolled steel corner section. For regulating the water level in the drainage and discharge tunnel the shutter is equipped with grooves for sandors (5), made of rolled steel corner sections (profile 50×53).

The device works in the following way: the shutter (7) (**Figure 2**) is lowered with the screw (3), preventing the movement, the level of water in the canal gradually rises until it reaches the mark of the rectangular weir (6) (**Figure 2, 3**). As the level of water continues to rise the surplus water, flowing over the threshold of the rectangular weir through the rectangular tunnel (2) (**Figure 1**), gets into the water discharge pipe (10) (**Figure 3**) and is directed beyond the system.

Changing the mark of the threshold of the weir with the regulating sandors it is possible to regulate the level of water in the canal corresponding the level of water in the checks. Taking into consideration the increase of the level of groundwater to 1 m from the surface and its relatively low mineralization (0,45–0,67 g/dm^3), it is possible to apply irrigation of the related crops (alfalfa, soybean, sorghum and others).

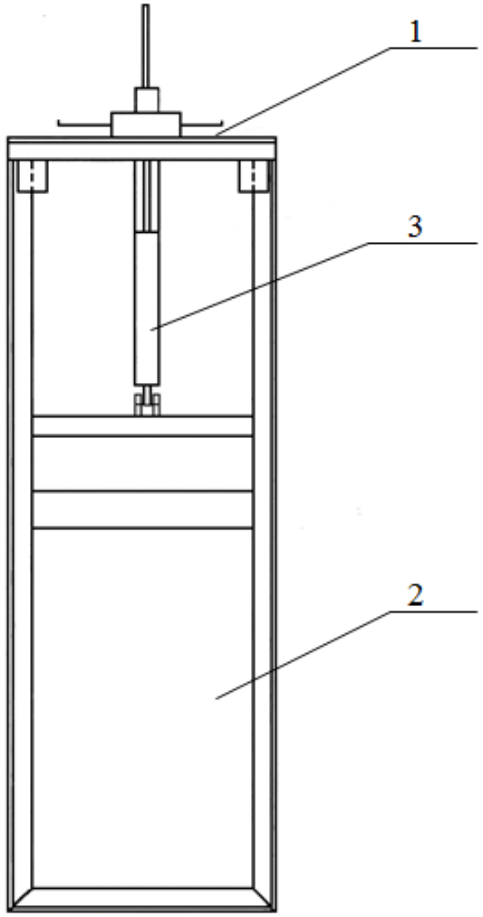

1 – slide, 2 – rectangular water discharge tunnel, 3 – screw

Figure 1. Front view of the regulator

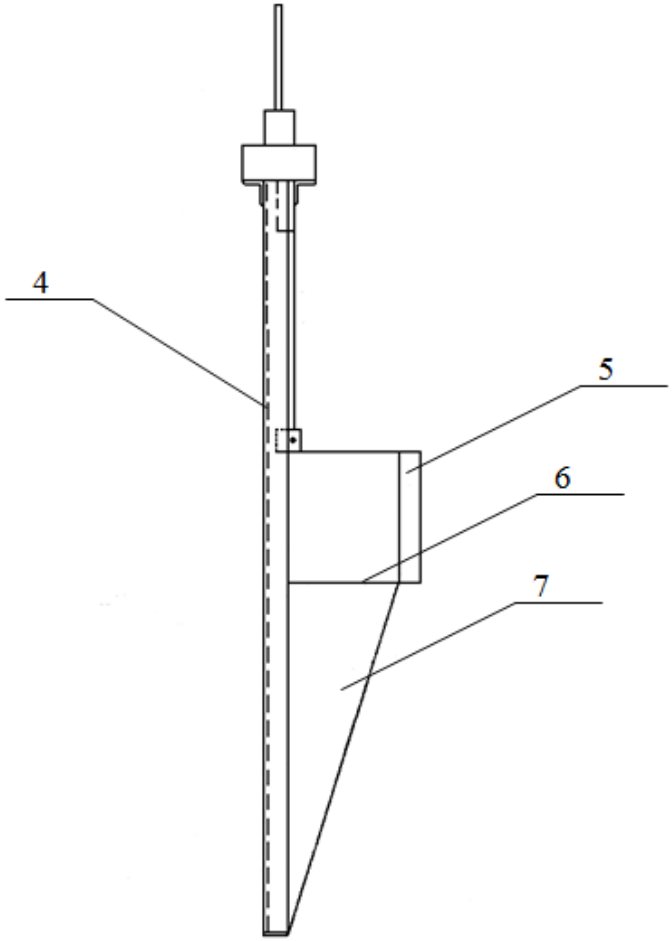

4 – support-chassis part, 5 – grooves for sandors, 6 – rectangular weir, 7 – shutter

Figure 2. Regulator, side view

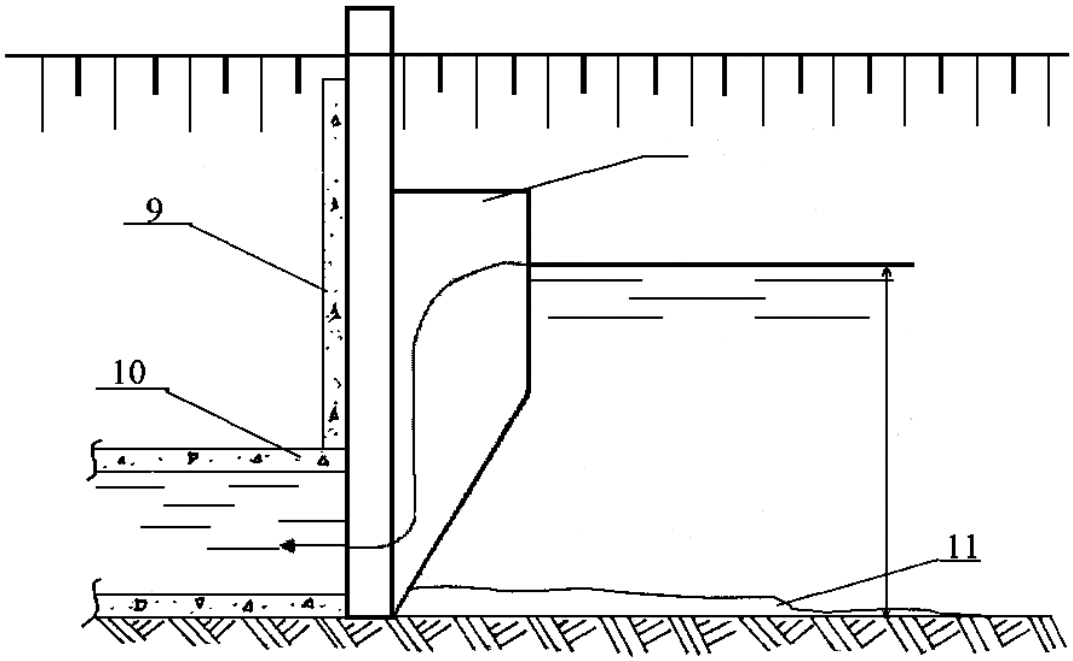

8 – device for regulating the level of drainage and discharge waters, 9 – concrete cap, 10 – water discharge pipe, 11 – silt, H – water depth in the drainage and discharge canal, h – water depth in the water discharge pipe, ⟵ direction of water movement.

Figure 3. The scheme of water movement through the regulator of the level of drainage and discharge waters of rice irrigation systems

During this period drainage and discharge waters can be used for surface irrigation and sprinkle irrigation of the related crops (alfalfa, soybean, sorghum and others), and also for moisture charging irrigation.

In 25–30 days after rice panicles develop the water supply to the checks is stopped so that at the beginning of the phase of full grain ripeness the water supply in the checks be used by the plants at the final phase of vegetation – full ripeness. If the technological recommendations concerning the depth of water in the checks (10–12 cm) are followed and the water supply is stopped on time at the phase of full ripeness, the discharge of surplus water does not normally occur [1, 3].

Analysis of rice yields for the research period showed that the yield ranged from 52,5 to 82,4 c/ha on the experimental plots and it was 43,8–61,6 c/ha on the test plots. The difference of the investigated parameter was 8,6 c/ha on average (**Table 1**).

In order to apply the technology of using drainage and discharge water of RIS for irrigating rice and related crops it is necessary to equip it with regulators of drainage and discharge outflow. We compared the cost of flat shutters and regulators calculated for 100 ha. Thus additional equipment of the RIS with regulators of drainage and discharge outflow costs 57610,42 hrn per 100 ha according to the prices of 2009 (**Table 2**).

Table 1

Rice yields for the period of 2009-2014

Variety	Experiment			Control			Difference, c/ha	Average yield c/ha	Maximum possible yield, c/ha
	Field number, crop rotation	area, ha	yield, c/ha	Field number, crop rotation	area, ha	yield, c/ha			
2009									
	1, I	27,5	53	6, I	19,2	61,2	-8,2	55,9	
	8, I	29,1	52,5				-8,7		
2010									
Ukrayina96	3, I	18,9	55,3	г. ч., I	7	55,3	0	50,8	100
Premium	7, I	18,6	57,6	4, I	3	43,8	13,8	55,7	105
2011									
Vikont	1, I	5,6	65,8	2, I	2,8	44,3	21,5	58,6	115
Serpnevy	1, I	8,9	58,8	2, I	2,8	60,4	-1,6	59,2	87
2012									
Vikont	6, I	19,2	79,7	8, I	11,1	55	24,7	70,7	115
Vikont	6,II	18,5	82,4	2, II	18,8	61,5	20,9	80,3	
Vikont	7,II	18,0	82,4				20,9		
2013									
Vikont	8, Novoukrayinska RIS	3,8	64,2	8, Novoukrayinska RIS	3,6	61,6	2,6	62,9	115
2014									
Vikont	8, Novoukrayinska RIS	2,6	71,3	8, Novoukrayinska RIS	3,6	71,0	0,3	62,7	115

Table 2

Investments in variants, hrn./100 ha

Parameter	Control	Experiment
Cost of hydro-installations in irrigation networks	125564,25	125564,25
Cost of hydro-installations in discharge networks	-	57610,42
General investment	125564,25	183174,67

Table 3

Main indices of efficiency of the technology of using drainage and discharge water of rice irrigation systems

Indices of efficiency	Units of measurement	Year of research	Variants		Effect achieved, ±Δ	Effectт hrn./ha
			experiment	control		
Yield	c/ha	2009	52,6	61,2	-	-
		2010	53	53	0	0
		2011	54,1	47,1	7	3794,0
		2012	82,4	61,5	20,9	8673,5
		2013	64,2	61,6	2,6	1534,0
		2014	71,3	71,0	0,3	2,9
Irrigation norm	m^3/ha	2009	14275	45525	-1250	30
		2010	14428	15628	-1200	28,8
		2011	14403	15581	-1280	30,7
		2012	14838	16088	-1250	30
		2013	15337	16567	-1230	25,5
		2014	18696	17581	-1115	30,1
Outfall of drainage and discharge outflow	m^3/ha	2009	347,53	2585	-2237,5	8,1
		2010	173,19	2628	-2454,8	6,9
		2011	1685,9	2581	-895,1	2,6
		2012	2169	3020	-851,0	2,9
		2013	4322	4322	0	0
		2014	2703	3084	-381,0	49,53

The technology of using drainage and discharge water allows for reducing the rice irrigation norm by 1000–1300 m^3/ha **(Table 3)**, at the expense of raising the level of groundwater and reducing filtration-related expenses within the check. Reducing the discharge volumes beyond the system is 400–2500 m^3/ha **(Table 3)**. The considerable variation is explained by different areas of the experimental plots, technical conditions of RIS and the quantity of the installed regulators.

Implementation of the technology of using drainage and discharge water of rice

irrigation systems for irrigating rice and related crops makes it possible to achieve the economic effect of 2000–4000 hrn./ha.

Literature

1. Tekhnolohiya vyroshchuvannia rysu z vrakhuvanniam vymoh okhorony navkolyshnioho seredovyshcha v hospodarstvakh Ukrayiny / Vantsovsky A.A., Kornberher V.H., Morozov V.V. ta in. – Kherson: Naddniprianochka. – 2004. – 78 s.

2. Pat. 87665 Ukrayina, MPK A01V 79/00. Prystriy dlia rehuliuvannia rivnia drenazhno-skydnykh vod / Morozov V.V., Kornberher V.H., Morozov O.V., Dudchenko K.V.; zaiavnyky ta patentovlasnyky Morozov V.V., Kornberher V.H., Morozov O.V., Dudchenko K.V. – № u2013 11501; zaiavl. 30.09.2013; opubl. 10.02.2014, Biul. № 3.

3. Pat. 88258 Ukraïna, MPK A01V 79/00. Sposib rehuliuvannia rivnia hruntovykh drenazhno-skydnykh vod rysovykh zroshuvalnykh system / Morozov V.V., Kornberher V.H., Morozov O.V., Dudchenko K.V.; zaiavnyky ta patentovlasnyky Morozov V.V., Kornberher V.H., Morozov O.V., Dudchenko K.V. – № u2013 10700; zaiavl. 05.09.2013; opubl. 11.03.2014, Biul. №5.

J11509-013

Yashchuk N., Slobodyanyuk L.

THE DYNAMICS OF TECHNOLOGICAL INDICATORS OF FLOUR IN DURING STORAGE OF GRAIN AND FLOUR WINTER RYE

National University of Life and Environmental Sciences of Ukraine
Kyiv, Heroyiv Oborony, 13, 03041

Abstract. The dynamics of technological of indicators "falling number" and acidity of flour during storage of grain and flour winter rye was investigated. Modes and periods of storage grain and flour was study. Closely direct link between the "falling number" and acidity of flour winter rye was establishing.

Keywords: grain, flour, rye winter, storage, term, mode, "falling number", titrated acidity.

An important task of agro industrial complex in our country is the transition from the control quality of finished products at the previous stages control of production throughout the technological cycle – "seed-corn-flour-bread." This will significantly reduce the cost of research. Will predict the quality of the final product and adjust the properties of intermediate products in the right direction [2, 5].

Quite an essential link in the technology chain of motion of products "from the farm to consumer" was, is and will be the quality of grain and flour. Quality affected by a number of factors can change and to cause change of the final product.

During storage the grain there is a change its initial quality affected by a number of physical, chemical and biological factors. Depending on the conditions storage bulk of dry matter of grain decreases, being changed for its chemical composition, germination, enzyme activity [1, 4-5].

A small particle of flour is chunks of living tissue. They have not lost the ability to biochemical changes and become much more sensitive to adverse environmental factors. Therefore flour is characterized by much smaller durability than grain.

The initial period of storage rye flour characterized maturation. Quality of flour improves. By long term storage of quality of flour deteriorates. Possibility change and intensity depends on the initial quality of flour before storage, its moisture, air temperature in the storage and access of oxygen to the flour etc. [3, 6-7].

Grain consists mainly of starch, proteins and lipids. Main thing importance's are an enzyme that is hydrolyses these substances or are involved in their synthesis. The hydrolysis of starch to form dextrin and maltose carry out α- and β-amylase. To assess the activity of amylase corn and flour is used the definition of "falling number". Index characterizes reduction viscosity suspensions of flour under the influence of starch hydrolysis by amylase. The higher the "falling number", the lower the amylase activity is. "Falling number" is directly related to baking properties of flour and therefore is of practical importance [1, 3].

When spoiling grain and flour from, the microbiological action and self-warming occurs, increasing acidity, that characterizes the freshness grain products. Grain normal, with no signs of deterioration in the quality has acidity by suspensions to 3^0. The higher acidity points to deterioration of grain quality. Spoiled grains may have acidity $7\text{-}8^0$ and more [2, 3].

Experimentally proved that α-amylase liquefies the dough and unsaturated fatty acids on the contrary strengthen it. Therefore, the final rheological properties of dough should be seen as a total result of the totality enzymes of flour [3]. Yes, Chernyh I. established that increase titrated (or decrease active) of acidity leads to reduced activity amylolytic enzymes flour. The result is an increase in "falling number" [8].

The purpose of research. Study of the dynamics of quality indicators "falling number" and acidity of flour during storage of grain and flour winter rye different modes and terms was.

Baseline data and methods. Study was conducted within 2011-2013 in the laboratory of department of storage, processing and standardization of plant products after name prof. B.V. Lesika of National University of Life and Environmental Sciences of Ukraine.

For the analysis of were selected samples grain of the sorts of winter rye Intensive 99, grown in the State enterprise "Experimental farm" "Chabany" ESC "Institute of Agriculture, of UAAS".

Grain was stored in of flax bags under cooling conditions in cold rooms KHS-2-6M (temperature + 5 + 10 ^{0}C) Grain and flour was stored in terms of grain storage dry (moisture 13-13,5%), monitor, and refrigerated and dry (storage temperature + 5- + 10 ^{0}C, humidity 13-13,5%).

Quality assessment was carried out before storing grain (control), after one, three, six, and nine and twelve month's storage of grain and flour winter rye.

Analyses were conducted using the methods of state standards.

Results. One of the most important indicators characterizing the degree of freshness flour is titrated acidity in process of storing is capable vary upward. The longer is shelf life, the higher the acidity of flour. This leads to the loss of freshness deterioration baking properties [57, 70].

Initial indicators titrated of acidity flour obtained from grain varieties Intensive 99 were 2.8 ^{0}. During storage of grain and flour has increased acidity. It varied considerably by terms and modes of storage.

Intense accumulation of acidity was in the initial period of storage. Within one month, especially for unregulated temperature regime was on increase 0.4-0.5 ^{0}, for temperature + 5- + 10 ^{0}C – on 0.1-0.2 ^{0} during storage was marked negligible growth of index within the limits 0.1-0.2 ^{0}.

In investigational varieties lower of acidity value observed the temperature + 5- + 10 ^{0}C, and the difference of unregulated regime was – 0.3-0.5 ^{0}.

The highest acidity was flour, which is was stored at unregulated temperature, which is especially noticeable after the third month. The difference between indicator acidity during storage reached 0.4 ^{0}.

Comparing the change in of acidity during storage of flour and grain (Figure 1) was recorded some difference in the dynamics of this indicator.

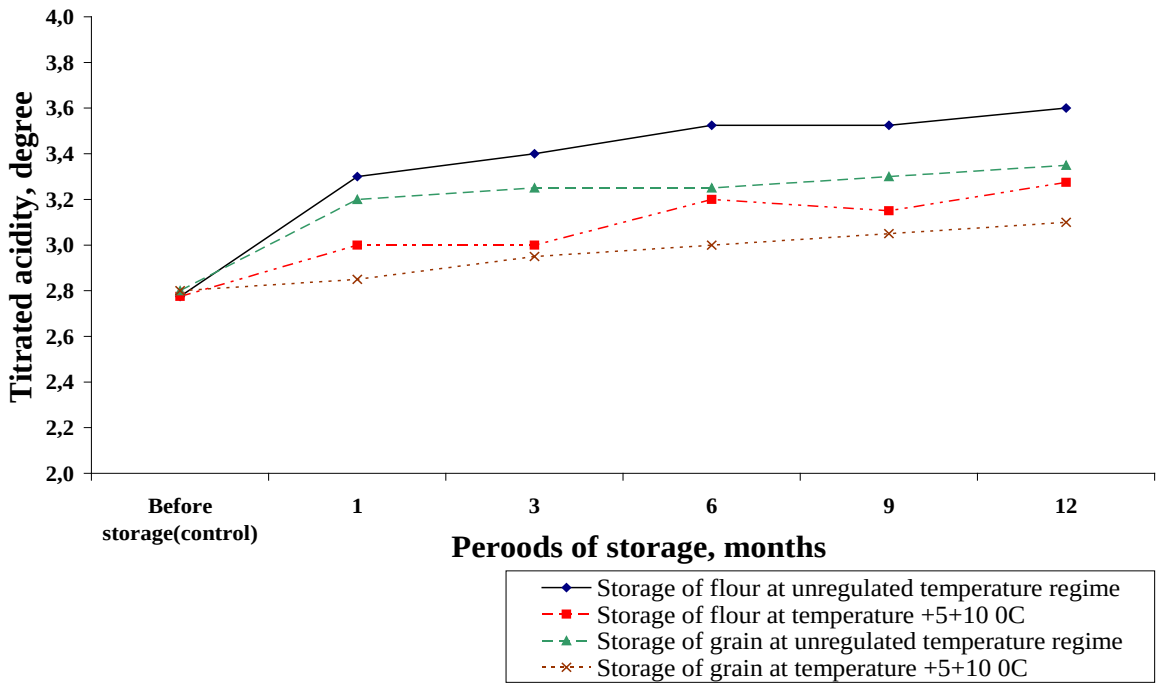

Figure 1. Dynamics titrated of acidity winter rye flour during storage of grain and flour in different regimes (average for 2011-2013 years).

Observing the change of titrated acidity during storage of grain and rye flour, we noticed a greater difference between the indices during storage of flour. Most the difference was when storage of flour at unregulated temperature conditions in an average of 0.2 ^{0} compared with storage of grain.

Interestingly is the compare change of the indicator "falling number" during storage of grain and flour. With the data presented in Fig. 2 it can be concluded that the "falling number" above during storage flour to the sixth month, compared with the storage of grain. The greatest difference there was after six months – 19 seconds during storage of flour for unregulated and 23 seconds – with the regulated temperature.

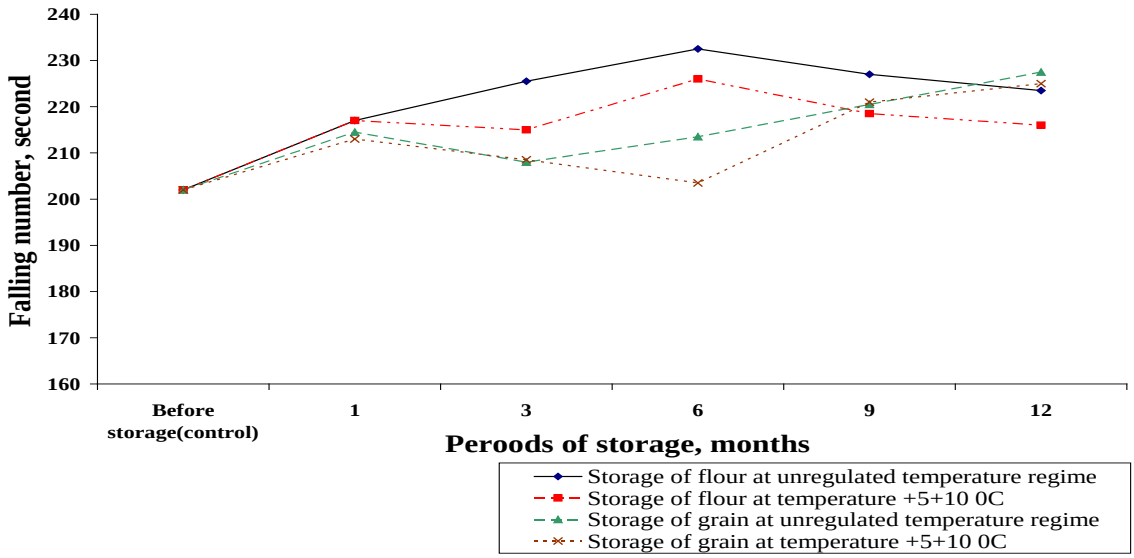

Figure 2. Dynamics "falling number" of flour during storage of grains and flour winter rye (average for 2011-2013 years).

After nine months, there was a decrease in "falling number" during storage of flour and increase during storage grain. The highest difference there was after twelve months – more than 4-9 seconds "falling number" was during storage of grain, compared with flour.

The deterioration of quality indicators after nine months of storage of flour can be explained by the passage of biochemical changes under the influence of time and environmental factors. Simultaneously grain during storage undergoes less adverse factors and characterized by the highest quality.

The variations of "falling number" were during storage of flour mainly within the limits the error of the experiment and in high correlation depending on the acidity flour.

Between the "falling number" and acidity flour was observed direct close relationship. Thus, during storage of flour winter rye varieties Intensive 99 for unregulated temperature regime coefficient of correlation amounted to 0.92, and for temperature +5-+10 ^{0}C – 0.76.

Strong direct relationship between "falling number" and acidity can be seen in Fig. 3, where with increasing of titrated acidity flour increases "falling number" during storage of flour winter rye in granary.

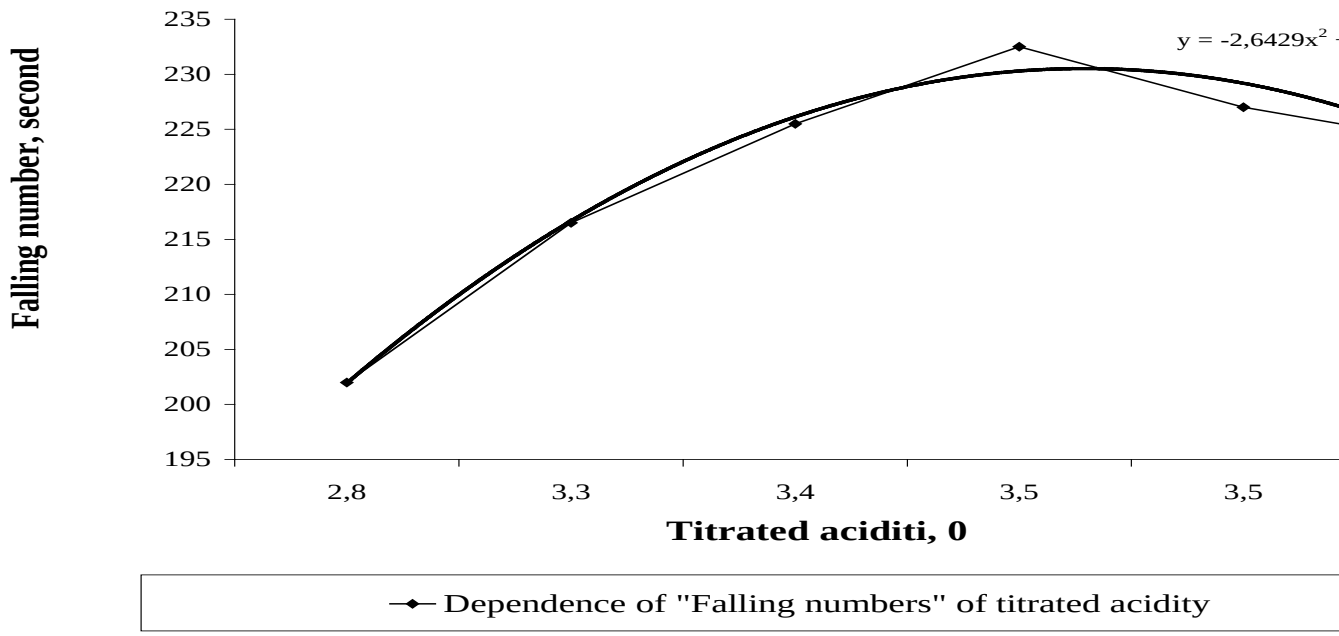

Figure 3. Dependence "falling number" of flour from titrated acidity during storage rye flour for unregulated temperature.

Thus, acidity 2.8 ^{0} indicators "falling number" of flour varieties Intensive 99 amounted to 202 seconds, with 3.3 ^{0} – 217 seconds, and 3.5 ^{0} – 233 seconds.

Conclusions

Higher indicators titrated acidity during storage characterized flour compared with grains (0.1-0.4 ^{0}), with the largest difference was obtained after the third month of storage – 0.4 ^{0}.

"Falling number" of flour during storage of flour to six months had higher indicators than during storage grain at 19-22 seconds, whereas after nine months –

was characterized by higher indicators of storing grain.

Storage flour winter rye is characterized by a close correlation between the titrated acidity and "falling number" for unregulated temperature regime – 0.92 and temperature + 5- + 10 ^{0}C – 0.76.

Of great scientific and practical importance is defined as "falling number" flour of winter rye, and its acidity during storage flour of winter rye.

Literatura:

1. Egorov G.A. Technological properties of grain / G.A. Egorov. – M .: Agropromizdat, 1985. – 334 p.
2. Kazakov E. From grain to the bread / E. Kazakov. – M .: Kolos, 1975. – 208 p.
3. Kazakov E. Biochemistry of grain and products of bread / E. Kazakov, G. Karpylenko. – AP: HYORD. – 2005. – 512 p.
4. Kurasov Y.B. Effect of timing of harvesting, post-harvest processing modes and storage on sowing and technological parameters of quality grains in terms of Polesie / Y.B. Kurasov. – Ukraine. – K., 1992. – 22 p.
5. Mashkov B.M. Handbook on quality of grain and its products / B.M. Mashkov, V.T. Tevosian. – [4th ed.]. – M .: Kolos, 1971. – 352 p.
6. Storage of grain: Trans. from English. V.I. Dashevsky. – M .: Kolos, 1975. – 424 p.
7. Trysvyatskyy L.A. Technology of reception, treatment, storage of grain and products of his processing / L.A. Trysvyatskyy, B.E. Melnyk. – M.: Kolos, 1983. – 351 p.
8. Chernykh I.V. Vliyanie to acidity of water-flour suspensoids on activity of amylolytic enzymes / I.V. Chernykh // Storage and processing of grain. – 2006. – № 11 (89). – P. 41-42.

J11509-014

Bobos I., Kushnirenko D.

RESISTANCE OF WATERMELON VARIETIES AGAINSTS DISEASES AND PESTS IN THE FOREST-STEPPE OF UKRAINE

National university of life and environmental sciences of Ukraine,
Kyiv, Heroyiv Oborony st., 15, 03041

Abstract. It is established that the growth and development of watermelon depends on the varietal characteristics. Examination for disease lesions showed relatively low stability of the entire assortment of watermelon against Fusarium wilt. During the growing of watermelon by the non-seedling way in forest-steppes of Ukraine the plants of the variety Northern Lights (July 25) started to fruit firstly, indicating the earliness and adaptability of the variety under the certain growing conditions. But the variety is characterized by low resistance to Fusarium wilt, which influenced the yield of marketable grade (28.5 t / ha).

The domestic varieties Favorite and Shyroninskyy were the most resistant to the diseases, with the degree of illness 8,7-13,8%, that provided the productivity of commodity fruits from 39.8 to 41.6 t / ha with an average weight of fruit 3.6-3.9 kg.

Key words: watermelon, variety, fruit, average weight, yield, stability.

Among the melon crops the watermelon more widely used in cooking, medicine and manufacturing. Fruits are used and fresh and in processed form. They are a source of important physiologically active substances that are absent in other plants or have them in insufficient quantities [1,3,5].

The value of watermelon caused by the chemical composition of the fruit. The high content of soluble sugars, pectin, fiber, minerals and vitamins make fruit pulp valuable for dietary food, it is a remedy against atherosclerosis, hypertension, anemia, hepatitis, cholecystitis, gout and many renal diseases. Pectin removes heavy metals and radionuclides. Watermelon is the best diuretic from all plant foods. It cleanses the body, especially the liver and kidneys from harmful substances. The content of sugars in the fruit can reach 8-11%, and 50-60% of these sugars are fructose [1,4,5].

Recently the manufacturers increase the expenses for the watermelon production that is affecting for the productivity growth by improving the cultivation technology and the implementation of varieties that produce more stable, reliable and high yields. Including the fact that the varieties of watermelon are created and grown in southern Ukraine, and the rising fuel prices increase the cost of fruits in the central and northern regions because of long distances, it was necessary to study the assortment of culture in order to implement the best of them into the production for the receiving of cheaper product in the steppes of Ukraine.

Therefore, the selection of highly productive varieties of watermelon in the forest-steppes of Ukraine is extremely important and promising part of the research in order to obtain high-quality fruits and their implementation into production.

The purpose of research is to improve the technology based by the selection of highly productive varieties of watermelon with high resistance to diseases and pests for the forest-steppes of Ukraine.

Materials and methods research. Research work on the study of watermelon

assortment was performed during 2013-2014 at the collection sites of Vegetable Growing Department of SRE "Fruit & Vegetable Garden" of National university of life and environmental sciences of Ukraine by the method of single-factor experiments [2]. The objects of research were varieties of domestic watermelon selection (Ohonok, Pivnichne Syaivo, Favorite, Shyroninskyy, Max Plus) and a sort of French selection (Charleston Gray), which according to the expert review is common in the production in region of forest-steppe. Ohonok variety was taken under control. The growth technology met the requirements for the recommendations about the production of watermelon by non-seedling way of growth in a certain area. Seeds of all varieties were sown at the same time - May 12 by scheme 140 × 70.

The distribution and degree of injury by diseases and pests damages were determined on the plants [2]. For the first time the pests were accounted at the beginning of mass flowering, the next accountings were done each decade on the identified five plants from each plot. From the diseases affected the watermelon plants were found Fusarium wilt. Accounting on plants was performed at time of germination (phase of cotyledon leaves). Till the end of vegetation during the last harvest the lesion was determined visually. Was calculated the percentage of infected plants.

Research results. According to data of some Scientifics [1,3], a large leaf surface makes productive use of solar energy during the process of photosynthesis, affecting on the accumulation of assimilators that is an intermediate in the formation of a high yield. Analyzing biometric parameters of studied varieties, it is necessary to note that the more developed plants by whip were such varieties as Shyroninskyy and Favorite (Table 1). The plants of these varieties had larger surface area of leaves, stem thickness near the root collar and plant height comparing with others. Varieties Pivnichne Syaivo, Ohonok (control) and Charleston Gray were less developed among the watermelon varieties by the whip.

Table 1

Characteristics of watermelon plants assortment by morphological features

Variety	Surface of leaves, dm2/plant	Thickness of the stem near root neck, mm	Length of main stem, cm	Quantity of leaves, pcs./plant
Ohonok (control)	155,8 ± 19,8	7,5 ± 0,7	214 ± 5,6	30 ± 1
Pivnichne Syaivo	141,9 ± 24,0	8,0 ± 0,3	223 ± 12,5	29 ± 2
Favorite	241,3 ± 17,1	8,1 ± 0,6	244 ± 12,6	34 ± 2
Shyroninskyy	225,6 ± 14,7	8,3 ± 0,5	235 ± 2,8	33 ± 2
Max Plus	202,7 ± 27,0	7,5 ± 1,0	226 ± 10,9	32 ± 2
Charleston Gray	184,3± 10,2	7,6 ± 0,2	216 ± 17,1	30 ± 3

According the results of mathematical processing of biometric indicators the intensity of plant growth and development of watermelon assortment during the vegetation is significantly different from control. However, the surface area of leaves

of variety Shyroninskyy (225.6 + 14.7 dm2) and Favorite (241.3 + 17.1 dm2) was higher compared to the control. The same was seen for the length of whip. It was set the significant difference in length of whip of varieties Shyroninskyy (235 + 2.8 cm) and Favorite (244 + 12.6 cm) from the control. There is not found significant differences by the other biometric features among the varieties.

The performed researches have shown that the most harmful among the diseases for watermelon plants was Fusarium wilting *(Fusarium oxysporum* Sochlecht) and ordinary spider mite *(Tetranuchys urticae* Koch.) [1,5].

Fusarium wilting is one of the most harmful diseases for watermelon. The disease penetrates into the roots and affects the vascular system of plants that die due to the poisoning from fungus' life products and vascular bundles overlap. The disease is spread through the affected soil. One of the most effective measures to fight with is to create and implement into the production the resistant varieties and hybrids [3].

The examination for diseases showed relatively low resistance of the entire watermelon assortment toward to Fusarium wilt (tab. 2).

Table 2

Development of Fusarium wilt on the varieties of watermelon plants, %

Variety	Dates of accounting				
	05.07	15.07.	29.07	12.07	31.08
Ohonok (control)	8,3	44,5	51,5	62,3	70,2
Pivnichne Syaivo	0	37,5	45,8	48,6	55,7
Favorite	0	0	0	3,8	8,7
Shyroninskyy	0	0	0	5,7	13,8
Max Plus	0	0	18,8	20,5	26,2
Charleston Gray	0	0	16,5	21,7	35,6

It was set that the injuries were higher in watermelon varieties Ohonok (control), where the development of the disease at the July 15 reached 44.5 %, and at the end of the vegetation - 70.2 %. The spread of the disease progressed rapidly that ultimately affected the productivity of plants at the end.

The varieties Favorite and Shyroninskyy are characterized by more developed aboveground mass with length of the main stem 235-244 cm and the quantity of leaves 33-34 pcs. /per plant that affected their resistance to disease. In the end of July the Fusarium wilt is not detected for the varieties Favorite and Shyroninskyy. They had lower intensity of the disease compared to other varieties and the degree of damage was 8,7-13,8% at the end of vegetation. The spread of the disease for the varieties Max Plus and Charleston Gray was slower than for the other varieties and the degree of injury was lower and had 26,2-35,6% at the end of the vegetation. The varieties Ohonok and Pivnichne Syaivo were affected the most from the others by Fusarium wilt and had the intensity of the disease 55,7-70,2 %. The varieties Favorite and Shyroninskyy are relatively resistant to Fusarium wilt at the end of the vegetation.

The combination of high temperatures with low humidity in July led to intensive breeding of spider mites on the watermelon plants. Population of the pest appeared for all the varieties equally. It was used the domestic biological medicine Aktophit

against pests, spraying the vegetative plants. Overall, the spread of spider mites and Fusarium wilt caused fewer yields of all watermelon assortments.

The trading yield of examined varieties was ranged from 27.2 to 41.6 t / ha. Research has shown that control inferiors to other varieties by larger commodity part of yield. Among the watermelon varieties the significantly higher commodity yield had Favorite with the yield of 41.6 t / ha. Higher yield of this variety is explained by a greater number of commodity fruits per plant and high resistance to disease that is the largest among all the studied varieties. Also the variety is characterized by high average weight of fruits - 3.6 kg. A minor difference in total by common and commodity yield was observed for the variety Shyroninskyy (39.8 tons / ha). The variety dominated the control by the marketability of products. At the same time the variety received fewer fruits at plant, and as a result it had lower yields compared to the variety Favorite.

The varieties Ohonok and Pivnichne Syaivo were the most precocious, but they inferior to other varieties for the resistance to Fusarium wilt and therefore had low marketable yield (27,2-28,5 t / ha).

Thus, the watermelon varieties Favorite and Shyroninskyy are characterized by high commodity yields on the infectious background, with the productivity of commodity fruits from 39.8 to 41.6 t / ha and with an average weight of fruit 3.6-3.9 kg.

Sources:

1. Бахчевые культуры [под ред. академика УАЭН А.О. Лымаря]. – К.: Аграрна наука, 2000.- 329 с.

2. Методика державного сортовипробування с.-г. культур (картопля, овочеві та баштанні культури) / за ред. В.В. Волкодава. – К.: Алефа, 2001. – 101 с.

3. Сич З.Д. Створення високопродуктивних сортів і гібридів кавуна столового// Автореф. дис. ... доктора с.-г. наук.- К., 1997.- 30 с.

4. Сич З., Бойко Г. Баштанництво залишається рентабельним// Пропозиція, 2001.- №1.- С.42-46.

5. Сільськогосподарський портал [Електронний ресурс] – Режим доступу: www.agromage.com.ua

*Supervisor: Candidate of Agricultural Sciences, docent Bobos I.M.

Article sent: 07.04.2015.

J11509-015

Zavadska O.V., Kolisnyk E.M.

EFFECT OF VARIETAL CHARACTERISTICS ON QUALITY INDICATORS OF POTATO TUBERS GROWN IN THE CONDITIONS OF UKRAINE'S FOREST-STEPPE

National University of Life and Environmental Sciences of Ukraine
Kyiv, Heroyiv Oborony, 13, 03041

Potato (Solanum tuberosum L.) ranked fourth most important crop after maize, rice, wheat. It is grown in 150 countries where about 75% of the population. By volume consumption its undisputed leaders are former Soviet countries, including Ukraine.

The results of research of economic-biological, biochemical parameters and trade indexes five varieties of potato tubers are presented in the article grown in conditions of the Ukraine's Forest-steppe. For complex of parameters among the studied varieties evolved tubers Rozara and Labadia. The content of the basic biochemical indicators dominated tuber varieties Sifra.

Keywords: potato tubers, variety, crop capacity, quality, product analysis, biochemical parameters, starch, ascorbic acid

Introduction. Ukraine has grown each year over 20-22 million tons of potato tubers. This intensive culture, which is able to give harvest of 30-50 tons / ha, equivalent to 11-18 tons / ha of grain crops [1,2]. To obtain high yields greatly depends on the variety [3].

The potato - a valuable and indispensable food. Nutritional and biological value determined by the content of tubers basic biochemical compounds, primarily – dry matter, carbohydrates, proteins, vitamins, etc. Amount biologically valuable component determines the suitability of tubers for processing or long-term storage and much depends on the varietal characteristics [2,3,5].

Marketability of products is also important, as this parameter depends greatly on the efficiency of potato tubers, so –manufacturing in general. In addition, for long-term storage suitable only standard tubers [5]. One of the objectives of our research was rating parties' potato varieties studied for crop capacity, commodity, organoleptic and biochemical parameters.

Material and methods research. The study was conducted during 2013-2014 years in accordance with the method of single-factor experiments. For experiments selected 7 varieties and hybrids recommended for cultivation in the conditions of Ukraine's Forest-steppe. Standards were determined variety of variety Rosara used in Ukraine, recommended for zone Forest-steppe and registered in 1997 year [6]. Biochemical, commodity and organoleptic tests were performed in potato research and teaching laboratory of storage, processing and product standardization by the generally accepted methods [4].

Results of research. Tubers studied varieties differed biometric and morphological parameters (Table 1). Important in practice, post-harvest handling and storage with indicators such as the mass of bubbles, their marketability and contents of the main biochemical parameters [7].

Table 1

Biological, morphological parameter and marketability of potato tubers different varieties, average for 2013-2014 years

Name of the variety	Weight of commodity tubers		Tuber size for the largest transverse diameter, mm	Index form	Quantity peephole, pc.	Marketability, %
	g	S.F.				
Rozara (control)	140.2	1.08	62.0	1.2	5.2	90.5
Aroza	111.5	1.18	56.5	1.1	6.8	86.2
Satina	88.0	1.24	54.5	1.2	6.6	88.5
Labadia	130.4	1.04	59.0	1.3	5.4	90.6
Sifra	96.8	1.18	49.1	1.4	6.8	88.4
NIR_{05}	7.8-8.1					1.3-1.8

The largest mass marketable of tubers was variety Santa Rozara (control) – 140.2g and Labadia (130.4 g). Most were aligned by weight of tubers grade Labadia – S.F. =1.04.

One of the main biometric indicators normalized current standards is the size of tubers for the largest transverse diameter. For transverse diameter of the largest varieties of tubers studied comply with the requirements of existing standards. The shape of tubers all grades were rounded-oval – shape index was 1.1-1.4.

Is most suitable for processing bubbles, where the minimum quantity peephole. The lowest were in bubbles varieties Rosary (control) and Labadia – 5.2pc. Thus, the quantity of peephole bubbles all studied varieties was suitable for processing.

It is known that, for long-term storage tubers are only suitable standard. So, one of the objectives of our research was commodity estimation parties studied potato varieties. Highest standard of tubers formed plant varieties Rosary (control) and Labadiya – more 90,0% (3,8% compared with the standard). Significantly lower this index compared to control samples of was in grade Aroza – 86.2% (4.3 % less than in the control). Established that on traumatized tubers influenced their weight and shape index. That, most mechanically damaged tubers found in a variety of varieties Rosary (control) and Labadia.

Established a close direct correlation between the mass tubers and their marketability (r = + 0,72). There was no significant difference between the tubers for marketability grades Satina and Sifra.

Known that better keeping quality, suitability for processing characterized varieties of tubers are piled high content of basic biochemical parameters, including - dry matter and starch. The results of biochemical analysis potato varieties studied are presented in Table. 2.

Contents of dry substances in the tubers fluctuated within 18.3-24.2 %. No substantial correlation between ripening variety and dry matter content were found.

The greatest amount of dry matter detected in potato tubers grade Sifra – more than 28.0 % dry matter, which is 3.8 % more than in the control.

Table 2

The content of the basic chemical elements in potato tubers of different varieties, average for 2013-2014 years

Name of the variety	The content of dry substances, %	Starch content, %	The acidity, %	Quantity of invert sugar, %	Vitamin C content, мг%
Rozara (control)	24.2	17.0	0.32	0.40	12.3
Aroza	19.4	13.6	0.32	0.20	11.2
Satina	22.0	15.8	0.32	0.34	8.4
Labadia	18.3	12.2	0.28	0.45	4.9
Sifra	28.0	20.2	0.32	0.33	14.5
NIR_{05}	1.5-1.8				

The greatest amount of starch as solids contained tuber varieties Sifra – 20.2%. For this indicator could refer to a group of tubers that have a high starch content (20 %). Tubers sorts Rozara (control) and Satina by starch content belong to the group of middle its content (15-20%); tubers of other varieties studied were characterized by low starch content (12-15%).

Tubers sorts studied the contents of the titrated acids did not significantly differ. Their accumulated from 0.28 to 0.32 %.

Content of monosaccharide affects the susceptibility to darkening tubers and their suitability for processing. The content of sugars in the tubers studied varieties ranged from 0.20 to 0.45 %. As a result of the correlation analysis revealed that the sugar content in potato tubers significantly affect their susceptibility to rotting ($r = 0.76 \pm 0.07$).

Ascorbic acid is accumulated in tubers of different varieties range from 8.4 to 14.5 mg%. The highest contents of vitamin C also accumulated tuber varieties Sifra – 14.5 mg%, 2.2 mg% more compared to the control. Significantly less vitamin C was in grade tubers Labadia – 4.9 mg% (7.4 mg% less than in the control variant tubers).

The content of basic biochemical parameters separated grade Sifra in tubers which accumulated the greatest amount of dry matter (28.0 %), starch (21.2 %) and ascorbic acid (14.5 mg%).

As in the any living organism, in potato tubers in storage period occurring biochemical changes. From their intensity depends on keeping quality, these losses, taste, disease resistance, etc. Of particular importance is the value of dry matter losses during storage (Figure).

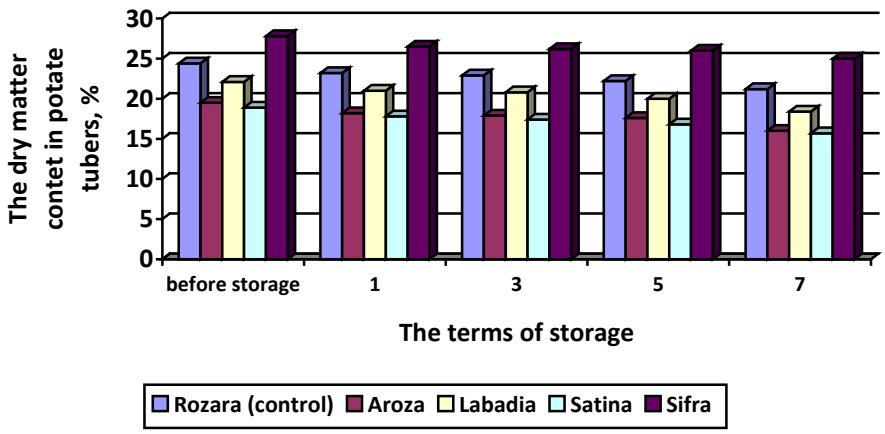

Fig. 1. Dynamics of dry matter content in potato tubers during storage

After seven months of storage in the tuber dry matter content remained quite high, ranging from 15.7 to 24.8%. How to store most of them were in potato tubers grade Sifra – 24.8%, 3.6% higher than in controls. The period of storage tubers lost 2,8-3,7% dry matter.

After 7 months of storage the highest nutritional and biological value with tuber varieties Sifra and Rozara (control). They keep the highest dry matter content (24.8 and 21.2% respectively), starch (20.2 ta 17.0%) and ascorbic acid – 8.8 and 11.9 mg%.

Conclusions: Thus, for complex of biometric and commodity parameters among the studied potato varieties were distinguished varieties Rozara and Labadia. which form the largest tubers and have high marketability (90%).

The content of basic biochemical parameters dominated tuber grade Sifra in tubers which accumulated the greatest amount of dry matter (28.0 %), starch (21.2 %) and ascorbic acid (14.5 mg%). The highest estimate tasting received tubers varieties Rozara.

References:

1. Vitenko V.A. Potatoes / VA Vitenko. – K.: "Yrozhai", 1990. – 253 p.

2. Demchenko R. Potato market in Ukraine / R.Demchenko // Propozytsia / 2009. – № 2. – P. 41-45.

3. Shpaar D. Growing potatoes / D. Shpaar, P. Schumann. – M.: IK “Rodnik”, 1997. – 248 p.

4. Skaletska L. Bases of scientific researches in storage and processing plant products: study guide / L. Skaletska, G. Podpryatov, O. Zavadska. – K.: Vydavnychyi center NAU, 2006. – 204 p.

5. Skaletska L. Storage and processing of plant products / L. Skaletska, G. Podpryatov, A. Senkov, V. Hylevych. – K.: "Meta", 2002. – 342 p.

6. State Register of Plant Varieties available for distribution in Ukraine in 2010 – K. Alefa, 2010. – 229 p.

7. Zinchenko O.I. Potato / O.I. Zinchenko, V.N. Salatenko, M.A. Bilonozhko – K.: “Agrarna osvita”, 2001. – 319 p.

J11509-016

Bober A.V., Chyhman O.V.

ECONOMIC AND TECHNOLOGICAL EVALUATION OF BITTER VARIETIES OF HOP WHICH REGISTERED IN UKRAINE

National University of Life and Environmental Sciences of Ukraine
Kyiv, Heroyiv Oborony, 13, 03041

Abstract. The results of a comprehensive assessment of bitter hops varieties of different maturity groups for economic, technological and commodity indices. Established that among the recognized varieties available as high-quality varieties and those with low quality and contribute to market saturation foreign raw materials. The presence of high-quality varieties of hop bitter type and appropriate natural resources makes it possible to provide for its own brewing industry domestic raw materials and expanding its use in other industries.

Key words: Hops, bitter varieties, economic indicators, merchandising indicators, technological indicators.

Ukraine has a very favorable soil and climatic conditions for growing high quality and competitive hop, so hop is not only important area for agriculture, but also an essential source of raw materials for brewing and other industries.

Hops are the most specific, indispensable and most expensive type of raw material for the production of beer, high-quality products can be obtained only if the use of certain hop varieties breeding, due to the peculiarity of their biochemical composition [6,7].

Soil and climatic conditions in Polissya and forest-steppe zone comply with the conditions of growing hops and allow to grow high quality raw materials. The existing plantations hop varieties available, taken from zoning, and new ones are not yet significant spread. Hop varieties domestic breeding differ in length of the growing season, productivity, quality indicators cones and others. [4,5,6].

The role of sorts in increasing productivity and improving product quality hops overemphasized. History shows that only on the basis of new varieties may progress hop world and build a balanced gross yield components of hop cones to meet the needs of the brewing and other industries.

The varieties of hops is necessary and indispensable element of a complex set of organizational, economic and technological measures to increase the production of high quality and efficiency hop, as well as a factor mitigating the impact of extreme weather conditions during the growing season [9].

Analysis of the importance of genetic and agronomic factors in increasing crop yields in most developed countries shows that over the past half-century sort of role, that genetic factor is twice the value of other farming practices that affect the improvement of soil fertility and improve growing plants. Based on the fact that hops are the most specific, indispensable and most expensive type of raw material for the production of beer, high-quality products can be obtained only if the use of certain hop varieties breeding, due to the peculiarity of their biochemical composition. Quality characterize varieties, so the formation of the varietal composition of industrial plantations attention shall focus on the best varieties for brewing.

The lack of a comprehensive assessment of bitter hops varieties of different maturity groups zoned in Ukraine promotes the cultivation of non-competitive domestic varieties, which weakens the internal market and hinders access to the outside. In this regard, there is a problem-depth study of the state of the test questions.

The purpose of research is the economic and technological assessment mountain hop varieties registered in Ukraine and identifying competitive varieties in the domestic market.

Material and methods research. The technique is based on research systematization and integrated evaluation of information materials (data for 2003–2013 gg.) Derived from the scientific literature, data state testing, research institutions and own studies [1–8,10].

Results. Conducted research found that zoned bitter varieties of hops have a significant difference from the yield 1,59–2,93 t / ha. (Table. 1). The varieties of hop bitter type characterized by a sharp flavor and a higher content of bitter substances and alpha acids compared with varieties of aromatic groups. The content of these bitter substances in hops varieties ranged from 18.3 to 28.0% alpha acids from 7.4 to 14.2% (Table. 1). Number beta acids is much lower than in aromatic varieties of hops.

An important factor in the presence Khmeliovyi flavor in beer is the quantity and quality of essential oil [8]. The content of essential oil in bitter hop varieties Ukrainian selection of different maturity groups ranged from 0.5 to 2.5 ml / 100 g (Table. 1). The highest oil content among varieties of bitter hops varieties with Ruslan, Promin, Obolonskiy.

In order to obtain high quality beer should be considered quantitative and qualitative composition of polyphenolic substances. Elevated levels of polyphenols in hops, which is used for ohmelinnya wort promotes higher their content in hopped wort and beer.

The content of polyphenolic substances hop varieties zoned in Ukraine are high in this component (Table. 1). Somewhat more content observed in polyphenolic substances grades Ruslan Nazariy. Lower content of polyphenol compounds characterized by a sort of Kumyr.

Quantitative content of xanthohumol in hops cones depends on variety selection. From Table. 1 shows that the amount of xanthohumol in bitter varieties and different ranges from 0.34 to 1.35%. Comparing these data with survey data M. Bienda [11] It may be noted that foreign varieties of hops xanthohumol content varies between 0.2–1.0%, which is on par with domestic varieties, but varieties Ksanta, Chaklun, Ruslan This figure exceeds the above figures. Elevated levels of xanthohumol in domestic varieties of hops enhances their use and compete in the domestic and international markets.

The final stage of assessing the quality of hop varieties are brewing their evaluation. As can be seen from Table. 1 group of bitter varieties most varieties of brewing assessment 19.0–21.9 points. In the maturity of each group are varieties of hops with lower and higher rates brewing evaluation compared to average values

Table 1

Economic and technological characteristic bitter varieties of hops different maturity groups

Name of the variety	Crop capacity, t / ha	The content of bitter substances,%	The content of alpha-acids,%	The content of beta-acids,%	The content of total polyphenols, %	The content of essential oil (ml /100 g)	The content of xanthohumol,%	Breweries evaluation (ball)
1	2	4	5	6	7		9	10
Early-maturing varieties								
Al'ta	1.59	24.1	13.1	4.5	6.3	1.50	0.37	19.0
On average	1.59	24.1	13.1	4.5	6.3	1.50	0.37	19.0
Middle-grade								
Zhytych	2.23	19.2	7.4	5.0	5.9	0.65	0.48	19.4
Zmina	2.70	21.0	9.5	5.7	4.9	1.60	0.52	20.0
Ksanta	2.50	18.7	9.0	8.0	6.7	0.60	1.11	21.0
Kumyr	2.37	25.0	14.2	4.5	4.0	1.50	0.34	19.2
Nadia	1.85	20.5	7.8	3.0	6.2	1.25	0.38	20.5
Nazariy	1.98	25.0	8.9	5.0	7.1	1.10	0.42	19.5
Obolons'kyi	2.28	22.0	9.0	4.5	6.3	2.00	0.48	20.0
Poliskyi	1.88	19.0	8.0	4.5	5.6	1.55	0.45	18.7
Promin	2.93	24.0	10.2	5.5	5.3	2.10	0.55	20.9
Ruslan	2.52	28.0	10.1	8.5	7.3	2.50	0.95	20.5
On average	2.32	22.2	9.4	5.4	5.9	1.50	0.57	20.0
Late varieties								
Granit	2.05	18.5	7.4	3.4	5.2	0.80	0.38	19.8
Potiyivskyy	2.30	21.2	10.0	4.0	5.6	1.05	0.75	19.7
Fakel	1.98	18.3	7.6	3.4	5.7	1.10	0.45	20.7
Chaklun	2.13	19.0	9.3	7.4	5.8	0.50	1.35	21.2
On average	2.11	19.3	8.6	4.6	5.6	0.86	0.73	20.4
On average, the group of aromatic varieties	2.22	21.6	9.4	5.1	5.9	1.32	0.60	20.0

for groups of varieties.

Conclusions:

1. Among zoned bitter hop varieties are available as high-quality varieties and those with low quality and contribute to market saturation foreign raw materials. The presence of high-quality varieties of hop bitter type and appropriate natural resources makes it possible to provide for its own brewing industry domestic raw materials and expanding its use in other industries: perfume, pharmaceutical, liquor and others.

2. Given the economic, merchandising and technological characteristics of mountain varieties of hops, note that the total population in the most competitive group of bitter varieties of early maturing variety recognized Alta; middle-grade Promin, Ruslan, Zmina, Ksanta, Obolonskiy, Kumyr; late – Potiyivskyy, Chaklun.

3. The most competitive bitter varieties can be processed in different hmelovi preparations and lay in the party for long-term storage, which will provide the brewing industry and other sectors of the economy (pharmaceutical, perfume, alcoholic beverage, etc.), High-quality domestic raw materials for a long period.

References:

1. A. Bober Comparative evaluation brewing qualities cones and hop pellets type 90 aromatic and bitter varieties of bitter substances content / AV Beaver // Scientific reports NUBiP. – K., 2011., № 4. – [electronic resource] // Access: http://nd.nauu.kiev.ua.

2. A. Bober Comparative evaluation brewing qualities cones and hop pellets type 90 aromatic and bitter varieties over the content of polyphenol compounds / A.V. Beaver // Scientific Bulletin NUBiP Ukraine. – K., 2011., – № 162. Part 2 – P. 196–199.

3. A. Bober Comparative evaluation brewing qualities cones and hop pellets type 90 aromatic and bitter varieties of content and composition of essential oil / A.V. Beaver // Scientific Bulletin NUBiP Ukraine. – K., 2011., – № 162. Part 2 – P. 209–213.

4. Reference hop / [Shabranskyy AS, Shulyar VM, MG Kovtun et al.]. – Exactly: Woodlands, 2000. – 224 p.

5. State Register of plant varieties suitable for dissemination in Ukraine in 2013 – K.: Aleph, 2013. – 464 p.

6. Product hop varieties approved for distribution in Ukraine / [IP Shtan'ko, V.V. Shablykino, K.P. Mykhaylichenko et al.]. – Exactly, "Polesie", 2010. – 68 p.

7. Lyashenko N.I. Biochemistry hop and hmeleproduktov / Lyashenko N.I. – Exactly: Polyssya, 2002. – 388 p.

8. Lyashenko N.I. Fyzyolohyya and biochemistry hop / N.I. Lyashenko, N.G. Mikhailov, R.I. Ryduk. – Exactly: Polyssya, 2004. – 408 p.

9. Ratoshnyuk I. Variety and Seed important factors increasing the yield of grain crops in the Polesie // I. Ratoshnyuk, L.I. Crow, V.I. Ratoshnyuk / agroindustrial production Polesie. – № 2. – P. 18–21.

10. V.V. Shablykin. Assessment of productive capacity in regional varieties of hops. V.V. Shablykin, I.P. Shtan'ko, K.P. Mykhaylichenko // agroindustrial production Polesie. – 2009. – № 2. – P. 43–47.

11. Biendl M. Einsatz eines xanthohumolreichen nopfenproduktes bei der vierherstel lung / MM Biendl, W. Mitter // Brauwelt. – 2000. – № 46. – S. 2006.

J11509-017

Zavgorodniy V.M.

SOWING PROPERTIES MAIZE GRAIN GROWN UNDER DIFFERENT CONDITIONS DURING THE LONG TERM STORAGE

National University of Life and Ecological Sciences of Ukraine,
Kyiv, Heroyv Oboronu 13, 03041

Annotations. Results studies of influence farming and tillage on sowing properties maize grain during prolonged storage was presented.

Keywords: corn, energy of germination, germinating capacity, weight of 1000 grains.

Corn is one of the most popular high-performance cultures in world crop and Ukraine. The growth of world production and consumption of corn in the last ten years was 25-30% [2]. Many farms and grain enterprises annually accumulated a significant amount of corn food and feed purposes. Therefore there is a need for storage of corn on a scientific basis using the following methods and storage modes that reflect the physical and biological characteristics of the grain and its purpose and requirements of certain sectors of the food industry [1].

Optimal shelf life of corn grown on various factors (farming systems and different tillage methods) to be used for various purposes was relevant.

Performance characteristics of cultivated corn normalized in consignment purpose - in the manufacture of baby food products and receipt of corn starch and molasses.

One of the commonly used criteria for evaluating grain damage is the loss of viability. Similarity, weight of 1000 seeds and energy of germination - a performance that quickly reaction to conditions of storage and characterizing its crop quality.

Energy germination corn grown for industrial farming systems before storage it on the highest storage (77%) was for conventional+minimum+harrowing cultivation. Slightly lower energy of germination were obtained from grain grown on the harrowing tillage and differential tillage - respectively 70 and 75%. The lowest germination energy (62%) characterized by grain minimum tillage tillage.

After storage, the energy of germination of corn decreased by 1-3% depending on the version of tillage. The highest energy of germination after 12 months was characterized by corn received by differential cultivation (85%), slightly lower - in conventional+minimum+harrowing tillage - respectively 80 and 78%, the lowest it has been for the cultivation minimum tillage - 61%.

With a longer time of storage energy of germination in corn grown in different variants significantly decreased. After 24 months of storage energy germination of corn decreased by 7.10% compared to the 12-month storage, but trends persisted, the highest it has been in the grain for differential tillage - 73%, and the lowest (57%) - minimum tillage for cultivation.

In corn grown for ecological farming systems, highest energy of germination before storage in granary there by conventional+minimum+harrowing tillage - 59%. Slightly less it was in the grain harrowing tillage and differential tillage - respectively 57 and 54%, and the lowest - in minimum tillage cultivation - 53%.

After two years of storage energy of germination of corn grown in variants with differential tillage cultivation dropped to 65%, while the version with minimum tillage, conventional+minimum+harrowing and shallow cultivation it dropped to 59-60%. The highest germination energy (65%) after 24 months of storage was in corn grown for differential tillage ecological farming systems.

When growing corn for biological farming systems, highest energy of germination was noted in the grain, before it storage for conventional+minimum+harrowing tillage - 72%. Lower index characterized grains obtained by conventional+minimum+harrowing and harrowing tillage - respectively 59 and 58%. The lowest it has been in the grain by minimum tillage - 50%.

After storage, the energy of germination of seeds grown under different tillage methods in agriculture decreased biological system. The highest it has been in the grain by conventional+minimum+harrowingand tillage - respectively 70 and 69%. After two years of storage, germination energy in corn for biological farming systems under conventional+minimum+harrowing tillage decreased to 2.3% compared to 21 months of storage. The highest it has been noted in the grain grown by conventional+minimum+harrowing tillage - 68% and lowest in grain cultivation for minimum tillage - 58%.

After 24 months of storage in grain germination energy decreased to 3-5% depending on the method of tillage, the lowest it has been in the grain at minimum tillage - 56%.

Similarity - one of the main indicators of quality that normalized standard for seed grain supplies, as well as for corn, which is used for the production of starch, molasses and baby food. According to the requirements of existing standards germination hybrid seed of the first generation should be at least 92%, tipping technical, this figure is normalized at 55%.

Analyzing corn germination during storage (table 1) we can conclude that the highest it has been before storage on the storage of grain grown by industrial farming systems in conventional+minimum+harrowing tillage processing and was under 80%. The lowest similarity (61%) had a grain obtained by biological farming systems in minimum tillage.

After 12 months of storage the highest similarity was noted in corn grown for industrial farming systems in conventional+minimum+harrowing tillage, which amounted to 97% and the lowest (90%) it was in the ecological and biological farming systems in harrowing tillage.

After germination, the storage of grain grown under different farming systems significantly reduced to 2-4%. After two years of storage the highest similarity (85 and 84%) was characterized by grain grown by industrial farming systems with differential tillage and conventional+minimum+harrowing tillage. Compared with 12 months storage after two years of storage similarity corn decreased by 11-16% depending on the method of tillage farming systems for industrial, to 13-17% - ecological system and 9-12% - for biological farming systems. The similarity of corn decrease in variants with differential tillage cultivation by an average of 11-14% depending on the farming system for minimum tillage - 12-13% for conventional+minimum+harrowing tillage by 9-15% for harrowing tillage - at 11-

17% .

Table 1

Germinating capacity maize grain grown under different conditions during long-term storage, %

Options		The duration of storage, months						
Farming systems	Tillage	Before storage (control)	9	12	15	18	21	24
Industries (control)	differential	79	98	96	95	92	89	85
	minimum tillage	79	98	95	91	89	86	82
	conventional+minimum+harrowing	80	98	97	92	90	87	84
	harrowing	75	96	94	88	85	83	80
Ecological	differential	77	97	96	94	90	87	82
	minimum tillage	69	94	92	88	84	82	79
	conventional+minimum+harrowing	69	98	97	95	93	86	82
	harrowing	63	94	90	86	85	82	77
Biological	differential	81	97	95	91	88	87	83
	minimum tillage	61	95	92	91	87	85	80
	conventional+minimum+harrowing	77	98	96	95	90	89	87
	harrowing	70	93	90	87	84	83	79
HIP_{05} factorA		7.42						
HIP_{05} factorB		1.58						

The similarity in corn after storage during two years for all variants satisfy the requirements of the existing standard (exceeding 55%) and allowed the use of grain for making baby food and processing on starch and molasses.

One of the main indicators that forms the fineness of grain and completeness is a mass of 1000 grains of corn. Weight of 1000 grains of corn before storage in granary was 263-300 g depending on the version of the research. Before storage in granary highest grain weight was marked by industrial farming systems, particularly in the form of conventional+minimum+harrowing tillage, where the figure was 299.3 g smallest weight of 1000 grains was minimum tillage for cultivation by industrial farming system - 290.0 g. Similar patterns were recorded throughout the duration of storage units.

The lowest weight of 1000 grains found in samples of corn grown on biological farming systems at the harrowing and minimum tillage - 255.0 and 245.1 g, respectively, the largest - in corn grown for industrial farming systems in conventional+minimum+harrowing tillage and differential tillage - 299.3 and 297.6 g general, grain produced by industrial system, had higher weight (average 296 g) compared to that used ecological (272 g) and biological systems (264 g).

During storage mass of 1000 grains gradually decreased (table 2). Thus, after 12 months of storage, this figure compared with the initial data, decreased by 1.5-6.7 g decreased most significant weight in grains grown by the method of differential tillage biological and ecological farming systems.

Table 2

Weight of 1000 grains of corn hybrid Puctovarivckyy 280 CB during long-term storage, g

Options		The duration of storage, months					
Farming systems	tillage	Before storage (control)	12	15	18	21	24
Industries (control)	differential	297.6	296.4	294.5	292.6	291.9	290.7
	minimum tillage	290.5	289.5	287.4	286.2	284.5	283.4
	conventional+minimum+harrowing	299.3	298.0	297.8	295.8	294.6	292.6
	harrowing	294.0	292.7	291.1	290.7	289.5	286.6
Ecological	differential	284.9	283.1	282.7	281.8	280.4	278.5
	minimum tillage	265.8	262.3	261.0	260.2	258.6	257.3
	conventional+minimum+harrowing	274.4	272.4	271.6	270.6	268.5	266.1
	harrowing	262.1	260.1	258.9	257.3	256.6	253.2
Biological	differential	278.1	274.4	270.1	268.7	264.0	260.0
	minimum tillage	255.0	251.8	250.8	248.1	247.6	246.8
	conventional+minimum+harrowing	276.6	273.6	270.8	268.4	2666	265.0
	harrowing	245.1	244.3	242.3	240.2	239.2	238.0
HIP_{05} factorA		5.6					
HIP_{05} factorB		2.8					

The slightest change in weight of 1000 grains during storage up to a year in corn grown for industrial farming systems - the difference between the original data and after 12 months of storage was an average of 1 to 1.3 g after 24 months of storage mass of 1000 grains more decreased and fluctuated depending on farming systems within 252.5-288.3 g. Thus the higher the figure was in corn grown for industrial systems (average 288.3 g), slightly lower - ecological system (263.8 g) and lowest in biological systems – 252.5 g

After two years of storage mass of 1000 grains in samples of options tillage farming systems industry fell by 6.7-7.4 g for ecological - on 6.4-8.9 g, and the biological - to 7.1-18.1 g greatest losses (18.1 g) of this indicator compared to the initial value recorded for its biological farming systems in the form of differential cultivation of the tillage. The smallest mass of 1000 grains after 24 months of storage was found in versions with harrowing and tillage cultivation minimum tillage on biological farming systems - under 238.0 and 246.8 g hardest corn was grown for differential tillage and conventional+minimum+harrowing tillage by industrial

farming systems where the weight of 1000 grains amounted to 292.6 and 290.7 g

After two years of storage mass of 1000 grains in samples of options tillage farming systems industry decrease to 6.7-7.4 g for industrial - on 6.4-8.9 g, and the biological - to 7.1-18.1 g. Greatest losses (18.1 g) of this indicator compared to the initial value recorded for its biological farming systems in the form of differentiated cultivation of the soil. The smallest mass of 1000 grains after 24 months of storage was found in versions with harrowing tillage and soil cultivation minimum tillage on biological farming systems - under 238.0 and 246.8 g hardest corn was grown for differential and conventional+minimum+harrowing tillage by industrial farming systems where the weight of 1000 grains amounted to 292.6 and 290.7 g

So, after 24 months of storage corn hybrid Pustovarivskyy 280 CB grown under different farming systems and methods of tillage sowing best properties of corn was obtained by industrial farming systems. High grain crop properties provided during its manufacture for all farming systems with differential and conventional+minimum+harrowing of tillage.

References:

1. Podpryatov G.I. Technology of storage and processing of plant products / G.I. Podpryatov, L.F. Skaletskogo, A.M. Senkov: Higher Education., 2004. – 270 p.

2. Maize. Growing, storage, conservation and useded/ [D. Shpaar, K. Hinapp, D. Dreger, A. Zaharenko, S. Kalencka, at all] - By: Alfacteviya LTD. – 2009. – 396 p.

17.04.2015.

J11509-018
UDC 663.81:635.13:631.526.3

Skaletska L.F., Zavadska O.V.

QUALITY OF CARROT JUICE PRODUCED OF ROOTS DIFFERENT VARIETIES

National University of Life and Environmental Sciences of Ukraine
Kyiv, Heroyiv Oborony, 13, 03041

Abstract. The results of research of economic-biological and technological parameters seven varieties of carrot roots, which has been grown up in conditions of Ukraine's Forest-steppe, are presented in the articles. Allocated varieties whose roots have the highest marketability, accumulate most dry matter, sugars, carotene etc. Establish a close direct correlation between the mass of roots and their marketability. Select the most suitable for the production of juice.

Key words: carrot, varieties, root, quality, biochemical, technological parameters, processing, juice

Introduction. Carrot – one of the main vegetable crops, which is used for juices. In Carrot juice contains large amounts of vitamins A, B, C, D, E, K, PP, and vitamin A (carotene) in natural form it is much more than in any other product. It is also rich in essential for the human body minerals, among which it is important to

note iron, calcium, iodine, cobalt, selenium, calcium, phosphorus and other nutrients [1,5].

Regular consumption of carrot juice promotes normal functioning of the gastrointestinal, genitourinary, cardiovascular and nervous system, increases its protective function.

Carrot juice is a kind of preventive means colds. It is phytoncides – substances that destroy disease-causing bacteria and viruses [3].

The quality of the juice is largely dependent on the varietal characteristics, so one of the tasks of research was to determine the influence of varietal characteristics on the yield and taste of the resulting juice.

Material and methods research. The study was conducted during 2011–2013 years in National University of Life and Environmental Sciences of Ukraine. For experiments selected 7 varieties and hybrids recommended for cultivation in the conditions of Ukraine's Forest-steppe [2]. Standards were determined variety of grade Karlena, used Ukrainian.

Carrots grown in the experimental field NUBiP Ukraine, which placed in the northern part Forest-steppe of Ukraine. Biochemical, commodity, organoleptic tests fresh of roots and experimental production of juic3 were performed in laboratory of storage, processing and product standardization Ya. prof. B.V. Lesyka by the generally accepted methods [4].

Results of research. One of the goals of research was to study the impact of biometric, biochemical indices and commodity carrot varieties studied in the quantity and quality of juice. The research results are presented in Table. 1.

The largest mass marketable root crop was in hybrids Santa Cruz F_1 (146,1 g) and Elegance F_1 (142.3 g), which was 21.4 and 17.6 g, respectively compared with control. The smallest roots formed plant a variety of China – 33.5 g less compared with the control. For most of root mass of marketable were aligned Elegance F_1 hybrids and Santa Cruz F_1.

The content of dry matter of roots hybrid Elegance F_1 essentially dominated control and other experimental variations in both years of research. Its advantage over two years, compared with controls was 1.6 %. Most sugars found in root hybrid Elegance F_1 and variety Royal Chanson – 7.1 and 6.6%, respectively. Most β-carotene accumulated roots grades Autumn Queen, Royal Chanson and hybrid Elegance F_1 – more than 13 mg / 100 g.

Computed correlation and regression relationship between the length of roots, dry matter content and marketability roots. It was established that the length of roots has a direct material effect on the dry matter content (r = +0,72), and weight - their marketability (r = +0,81). The highest marketable set of roots hybrids Elegans F_1 (95%) and Santa Cruz F_1 (93%), which formed the hardest roots.

For best organoleptic characteristics among the studied assortment of carrot did roots hybrid Elegans F1 and varieties Autumn Queen, who received while taste the highest score – 7 points.

The research results of juice derived from fresh carrot various grades are given in Table. 2.

Table 1

Biometric, biochemical, commodity and organoleptic parameters assortment of carrots, average of the years 2011-2013

Name of the variety	Weight marketable of root		Contents in roots		Marke-tability, %	Tasting estimate, score
	г	S.F.	dry matter, %	β-carotene, mg/100 g		
Karlena (control)	123.4	1.26	10.5	11.2	86.4	6.2
Elegans F_1	144.3	1.06	12.1	16.2	95.0	7.0
Vitaminna 6	131.9	1.34	9.6	9.0	82.9	5.5
Chinese	91.6	1.28	10.2	3.4	77.8	5.6
Autumn Queen	111.9	1.14	10.3	13.0	86.7	7.0
Royal Chanson	129.1	1.13	11.4	15.4	85.4	5.8
Santa Cruz F_1	146.1	1.10	10.6	12.2	94.2	6.8

Yield of juice of roots of the studied varieties was in the range of 41.8 to 53.2% (Table 2). Most of juice received from a variety of roots Autumn Queen – 53.2%. Least of juice received from a hybrid of roots Elegance F_1 – 40.8%. There was no significant difference between this indicator and root crops varieties Vitaminna 6 and Chinese (42.7 and 42.8 %); also the Royal Chanson and Santa Cruz F_1 (46.7 and 47.1 %).

Table 2

Quantity and quality of carrot juice with different varieties

Name of the variety	Quantity, %		Content of dry soluble substances, %	Taste the juice	Quantity of dry mass of marc		The dry weight per 10% humidity, %
	juice	marc			%	humidity, %	
Karlena (control)	49.0	47.5	7.1	8.0	14.5	7.2	16.9
Elegans F_1	41.8	59.2	10.1	9.0	17.7	5.0	22.7
Vitaminna 6	42.8	57.2	7.0	6.0	13.4	10.5	12.9
Chinese	42.7	57.3	7.0	4.0	14.5	6.0	18.5
Autumn Queen	53.2	46.8	8.0	9.0	17.4	8.3	19.1
Royal Chanson	46.7	53.8	8.8	9.0	16.0	5.4	20.6
Santa Cruz F_1	47.1	52.9	7.0	9.0	17.3	11.2	16.1

The content of soluble dry matter in the juice substantially prevailed control sap derived from of roots hybrid Elegance F_1 – 10.1%, up 3 % compared with the control. Among other research options for significant differences in this indicator have been identified.

Best rich sweet taste of juice was obtained from of roots hybrids Elegans F_1, Santa Cruz F_1 and varieties of Autumn Queen and Royal Chanson – 9 points. The bitter flavor the juice was derived from of roots Chinese (4.0 points); watery, savourless - a of roots varieties Vitaminna 6.0 – 3.5 points. Established a strong direct correlation between the amount of soluble dry matter in roots and taste the juice. Not detected significant relationship between the mass of roots and yield of juice.

Blend juice with grape juice varieties Isabella in good taste by mixing 3 parts carrot and two parts grape, or 1:1.

Solid parts obtained after squeezing juice, dried in the dryer to dryness. To drying use "Sadochok-2M" (TU 23061103.001-98), which refers to convective air dryer chamber type.

These husks can be used to obtain a powder, rich in carotene and other biologically valuable substances that remain in the solid part.

Quantity marc, which can be obtained after drying the solid part, that remained after squeezing juice was 12.2–22.7 % (calculated at 10% humidity). Most of all them can be obtained from the root of the hybrid Elegance F_1 – 22.7 %.

The highest number of points for complex organoleptic received dry husks obtained after squeezing the juice of roots of hybrid Elegance F_1 and varieties Royal Chanson. They had a nice rich flavor, bright orange a uniform color.

Conclusions. The highest scores for organoleptic characteristics of roots were hybrids Elegans F_1 and Santa Cruz F_1, as well varieties Autumn Queen. The highest marketable of roots hybrids Elegans F_1 (95 %) and Santa Cruz F_1 (93 %), which formed the the hardest roots. The highest content of dry matter and sugars found in the roots of hybrid Elegance F_1 and varieties Royal Chanson. The highest estimates received tasting produce hybrid Elegance F_1 and varieties Autumn Queen.

For the production of carrot juice is appropriate to use varieties of root Autumn Queen, Royal chanson and Santa Cruz as well hybrids Elegans F_1. Unsuitable for this root varieties Chinese and Vitaminna 6.

References:

1. Barabash O. Biological bases of vegetable / O. Barabash, L. Taranenko, Z. Sych. – K.: Aristei, 2005. – 354 p.
2. State Register of Plant Varieties available for distribution in Ukraine in 2010 – K. Alefa, 2010. – 229 p.
3. Kuts O. Perspectives the processing and storage of agricultural products. - Economy AIC, 2004. – № 6. – P. 9-11.
4. Skaletska L. Bases of scientific researches in storage and processing plant products: study guide / L. Skaletska, G. Podpryatov, O. Zavadska. – K.: Vydavnychyi center NAU, 2006. – 204 p.
5. Skaletska L. Storage and processing of plant products / L. Skaletska, G. Podpryatov, A. Senkov, V. Hylevych. – K.: "Meta", 2002. – 342 p.

CONTENTS